Supplement to Electrical and Electronic TRADER 22 March 1978

Trader
SERVICE SHEET

3308/T431

Telefunken 712

Colour Television Chassis

Part 1

(Covering the basic chassis for the following Telefunken receivers: 22in 656, DC676, 26in 746, 8408, 8610, DC886, DC8660.)

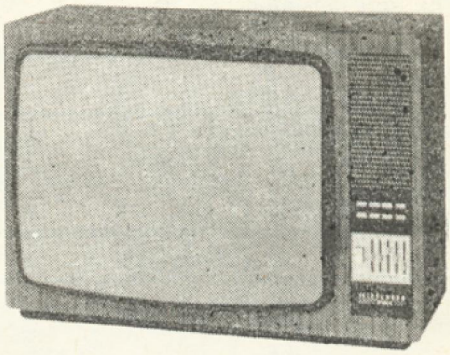

The Telefunken 712 is the basic chassis used in the 1977/78 range of Telefunken colour receivers, to which additions and changes are made to provide the various special facilities offered by the seven different models. These three TRADER Service Sheets, 3308/T41, 3310/T431 and 3311/T431, describe the basic 712 chassis only. The additional modules required for the special facilities will be covered at a later date.

All the models listed at the top of this sheet use the 20AX 26in crt except the 22in 656 and DC676, which use an in-line Telefunken crt. Hence there are circuit differences between the 26 and 22 inch versions in the convergence, line output, RGB output and crt base. These areas are shown as separate circuits in these service sheets where appropriate.

The basic models 656 and 746 use manual touch-button channel selection, and include a channel for VCR operation. A wired remote control unit is available as an optional extra, requiring an additional module.

Special additional facilities for the other models which use the 712 chassis are as follows:

8408 — infra-red cordless remote control
8610 — self-seeking tuner, TV games.
DC676 — digital clock display, cordless remote control
DC886 — self-seeking tuner, cordless remote control
DC8660 — 10 watt quality audio output stage, self-seeking tuner, digital clock display, cordless remote control.

The 712 chassis is completely modular. The modules for the vision, sound and colour stages plug into a "signal" mother board, and those for the power supplies and field timebase into a "deflection" mother board. The line timebase is a complete module and forms the third major assembly of a three-part main chassis. Hence examination of each model chassis will show unused connector positions; these accept the additional modules for the special extra facilities.

The main chassis can be withdrawn clear of the cabinet on extendable runners, and then "opened out" and stood at 45 degrees to the horizontal or vertically to allow simultaneous access to both sides of printed circuit boards. In addition, all modules entering the mother boards can be plugged into the reverse side of each board for service.

Apart from the crt, only the station selection, tuning, and operator controls are mounted on the cabinet front. The convergence unit is held in runners at the cabinet side, but can be withdrawn and replaced in a position where it is accessible from the cabinet front while viewing the screen when performing the convergence procedure.

Brief Specification

Power supply	240V 50Hz a.c. mains
Fuses	4A, 2A (two), anti-surge, miniature cartridge.
Tuner	Electronic-tuned Telefunken ET176 K/68 covering uhf channels 21 to 68 (470 to 854MHz.)
Intermediate frequencies	Vision 38.9Mz, dound 32.9MHz, colour sub-carrier 4.47MHz sound intercarrier 6MHz
CRT	22 inch models: Telefunken 510 KGB 22 TC 01 26 inch models: Mullard A66-500X
Louspeaker, audio output, semiconductor complement, dimensions and weights	These very according to model.
Manufacturer	AEG-Telefunken (UK) Ltd., Bath Road, Slough, Berks SL1 4AW. Slough 872101
UK Service	as above, telephone Slough 872426

Dismantling

(see interior view diagram)

1. Disconnect receiver from mains supply.
2. Release 2 plastics latches A, lift back cover bottom edge, free top edge from cabinet top flange, and remove back complete
3. *To ease out main chassis to service position:*

(a) Swing out service support runners B from below main chassis, until they are in line with the cabinet runners D. This unlocks the chassis, which can now be lifted on to the service runners and pulled outwards until the complete chassis is clear of the cabinet sides.

(b) The two vertical chassis, those containing the signal base board and the line timebase board, can be hinged down until they are either horizontal (in line with the deflection chassis) or placed in an intermediary position at 45 degrees, after releasing latches F.

(c) The complete main chassis can also be lifted into the vertical, with the foil side of the deflection base board facing outwards, or placed in an intermediary 45-degree position, allowing simultaneous convenient access to both sides of the boards. In the 45-degree position, 2 plastics supports can be eased out from below the chassis. These must be folded back into their rest position before sliding the chassis back into the normal operating position.

4. With the main chassis withdrawn, individual sub-boards can be unplugged from their base boards after releasing the plastics holding latches and the board clamps. The boards can then be re-inserted into the outer (foil) side of the main board for service inspection.

5. *To remove the main chassis completely:*

(a) Unplug the multiway and single connectors for the cabinet front controls units, loudspeaker, and the deflection coil and convergence units. Note that the connectors are individually "keyed" to assist correct location on refitting, but if in doubt, and particularly with single or two-pin connectors, refrer to the interconnection diagram. Note also that not all the positions in the chassis receive connectors — the additional pins are for extra feature boards fitted with certain receivers, such, as the hi-fi audio module, remote control, digital clock and that for TV games. etc.

(b) Remove the c.r.t. anode cap, and c.r.t. base board, having first freed the earth bonding link from the braiding over the crt bulb (held by a spring clip to the braid.)

(c) Lift the chassis from the service runners, complete with the c.r.t. base board

6. *Convergence unit*

When performing the convergence procedure, the convergence unit can pulled out from the cabinet r.h. side runners J and the side lugs placed into the slots on fittings K at the cabinet top. This allows the convergence unit controls to be operated from the cabinet front while viewing the screen.

7. *To remove the programme storage unit* remove two screws L.

8. *To remove the switch touch contact board:* remove screw M.

9. *To remove the operator controls panel:* release plastics latches.

10. *The loudspeaker* is held to the cabinet by four clips

11. *Removing c.r.t.:*

(a) Remove main chassis.

(b) Slacken neck clamp, remove purity magnet and deflection coil assemblies. Remove convergence unit.

(c) Lay cabinet face downwards on to a protective resilent surface.

(d) Remove 4 nuts with washers N.

(e) Lift out c.r.t. complete with degauss coil assembly. Remove degauss coils and fit these to replacement tube before fitting tube into cabinet.

12. Access to foil side of line timebase board is after removing metal screen plate, held by 2 screws P. Access to line transformer and other components on line timebase board is after releasing latch Q and removing top screening box.

Circuit notes

To avoid reproducing the large overall circuit of the signal board assembly on too small a scale as to be comfortably legible, the circuits and board diagrams of each module are shown as separate diagrams, and that of the board itself separately. To trace connections between modules, therefore, proceed from the connector pin numbers and destinations given on a module circuit and trace the interconnection on the signal base board circuit, or vice versa as appropriate.

Interior view

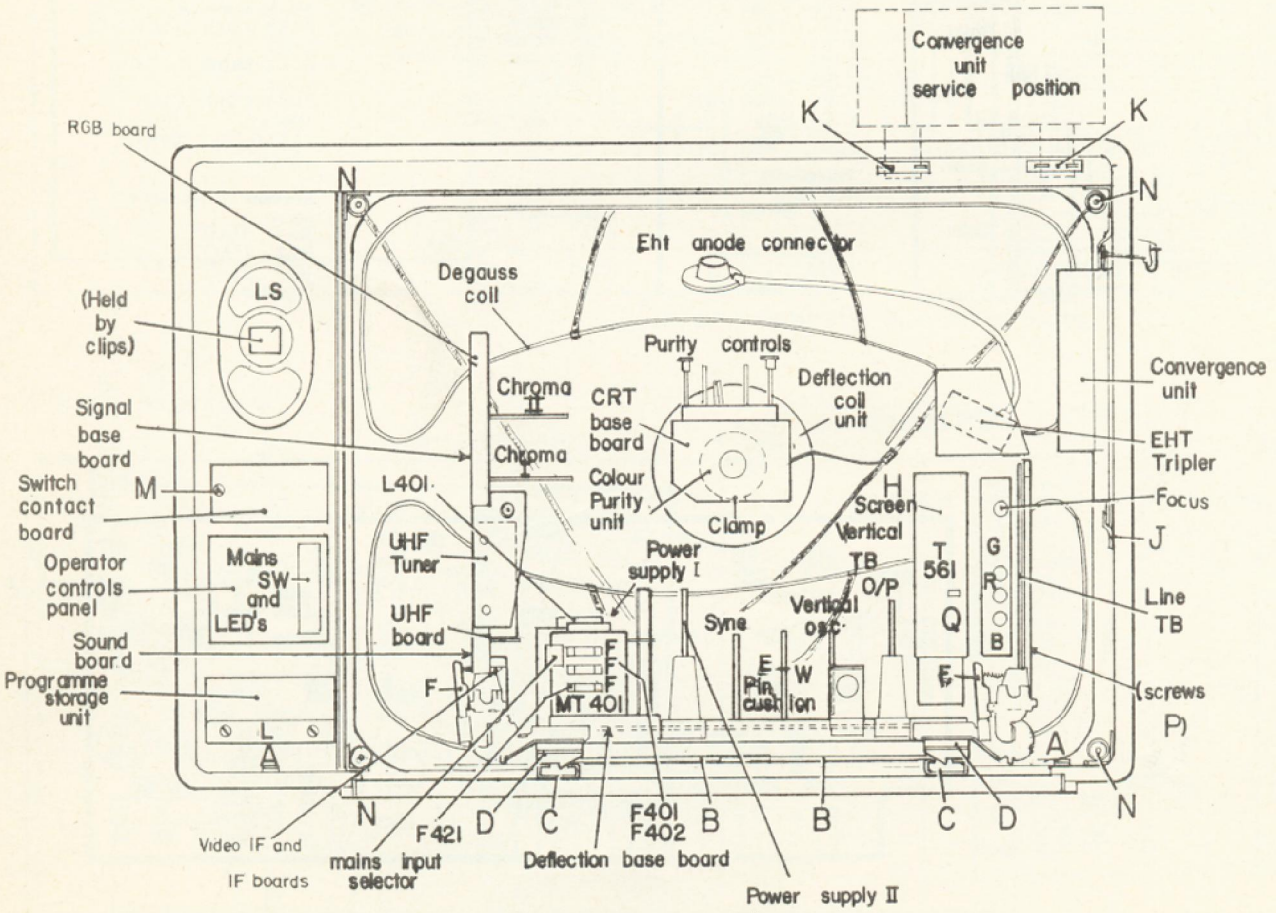

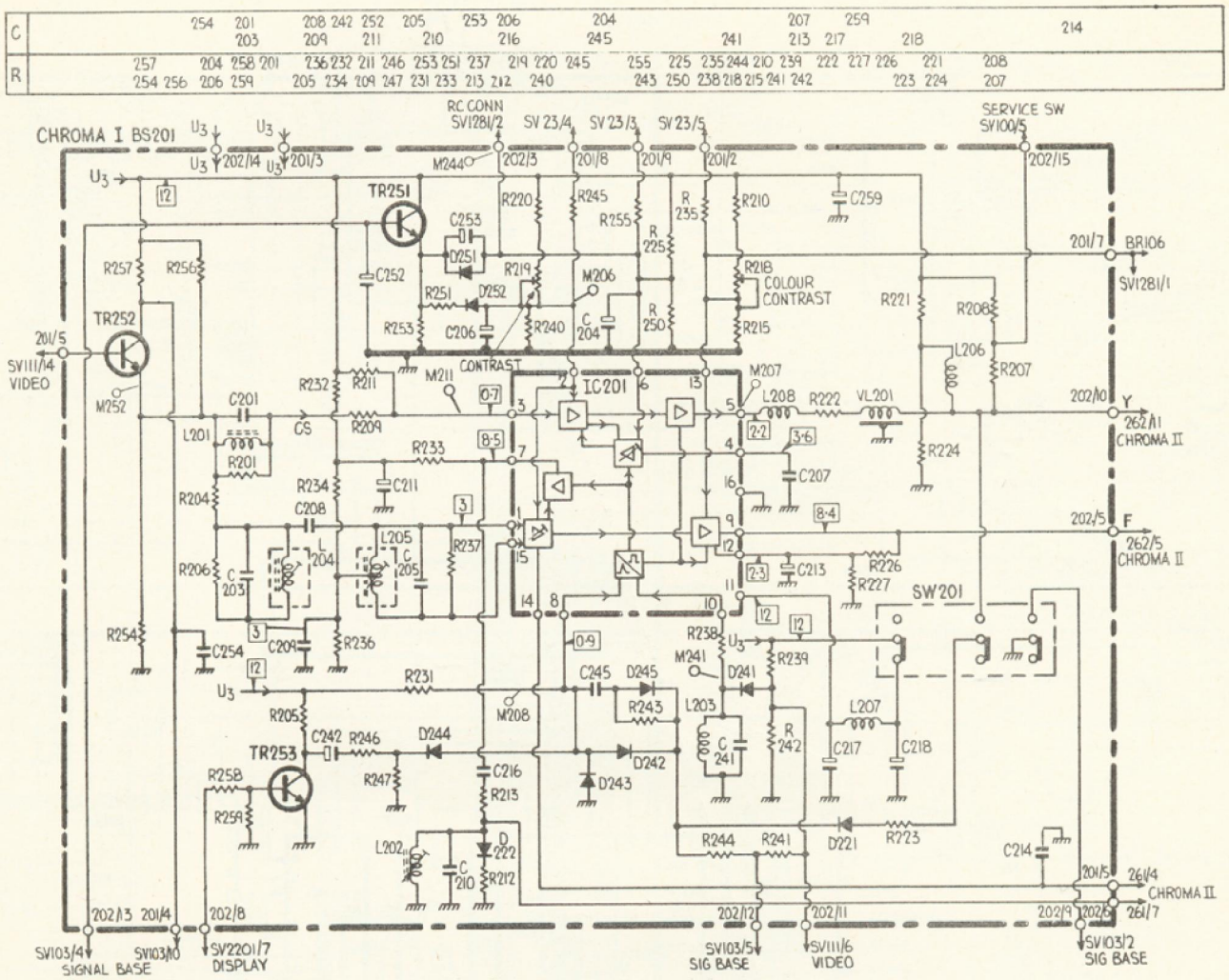

Chroma I module

Resistors

R201	8.2kΩ	E2
R204	4.7kΩ	E2
R206	6.8kΩ	E2
R205	2.2kΩ	F2
R207	33kΩ	F1
R208	220kΩ	F1
R209	2.4kΩ	E2
R210	1.8kΩ	E1
R211	100kΩ	F2
R212	47Ω	F1
R213	100Ω	F1
R215	1kΩ	E1
R218	5kΩ*	E1
R219	2.5kΩ*	E2
R220	1.8kΩ	E1
R221	8.2kΩ	F2
R222	820Ω	F2
R223	15kΩ	F1
R224	910Ω	F2
R225	6.2kΩ	E1
R226	39kΩ	F1
R227	15kΩ	F1
R231	33kΩ	F2
R232	18kΩ	E2
R233	1kΩ	F2
R234	27kΩ	E2
R235	3.9kΩ	E1
R237	560Ω	E1
R238	1kΩ	F1
R239	1.8kΩ	F2
R240	1.2kΩ	E2
R241	1.2kΩ	F2
R242	100Ω	F2
R243	10kΩ	F2
R244	1.2kΩ	F2
R245	10kΩ	E1
R246	1kΩ	F2
R247	68kΩ	F2
R250	510Ω	E1
R251	8.2kΩ	F2
R253	330Ω	F2
R254	1kΩ	E1
R256	12kΩ	E2
R257	820Ω	E1
R258	8.2kΩ	F2
R259	820Ω	F2

* variable

Capacitors

C201	56pF	E2
C203	12pF	E2
C204	22μF	F2
C205	470pF	E1
C206	2.2μF	E2
C207	0.15μF	E1
C208	33pF	E2
C209	47nF	E2
C210	220pF	F1
C211	10μF	E2
C213	10μF	E1
C214	10nF	F1
C216	1nF	F2
C217	100μF	E1
C218	220μF	E1
C241	2.2nF	F1
C242	10μF	F2
C245	1nF	E1
C252	22μF	F2
C253	10μF	F2
C254	330pF	E1
C259	47μF	E2

Transistors

Tr251	BC238	F2
Tr252	BC238B	E1
Tr253	BC238B	F2

Integrated circuit

IC201	TBA560A	F1

Diodes

D221	1N4148	F2
D222	1N4148	F1
D241	1N4148	F1
D242	1N4148	F2
D243	1N4148	F2
D244	1N4148	F2
D245	1N4148	F2
D251	1N4148	F2
D252	1N4148	F2

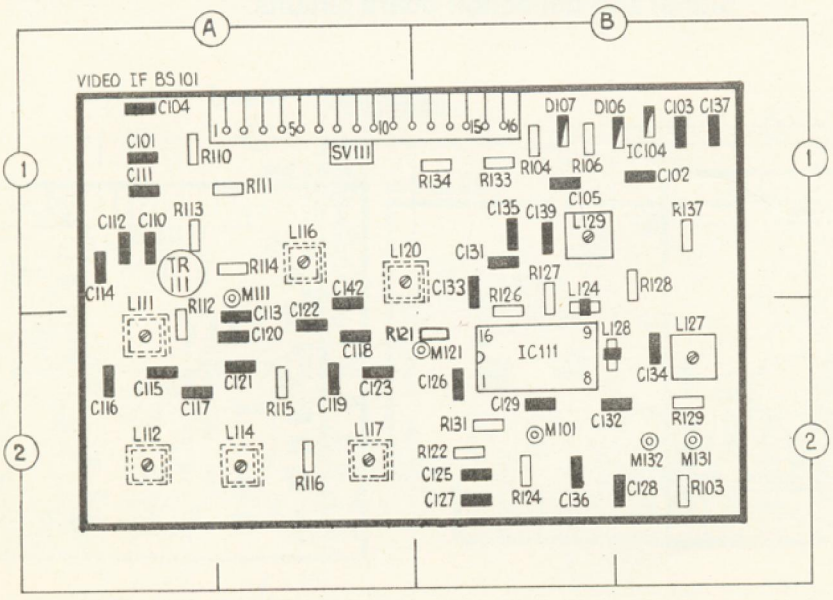

Video IF board

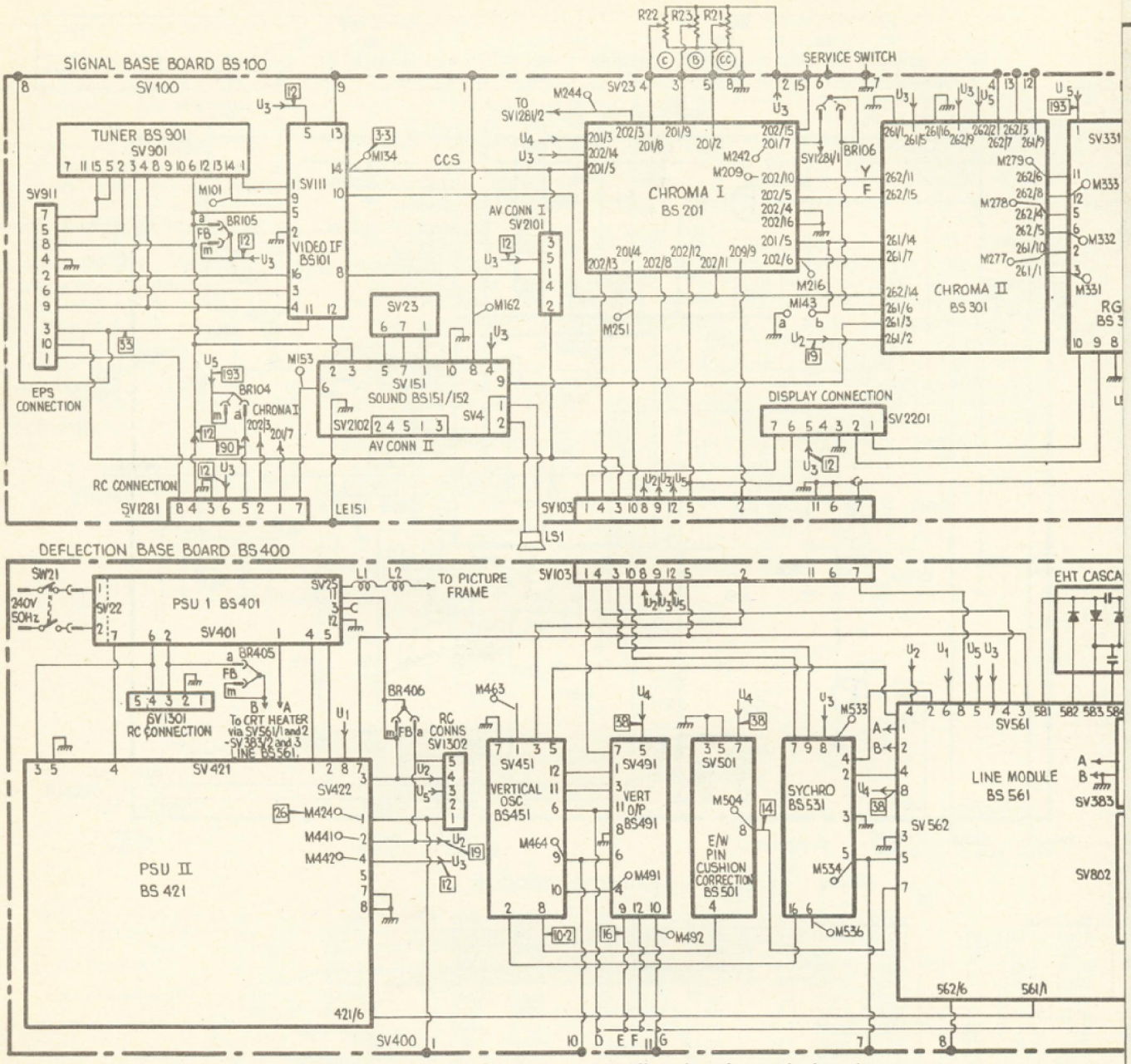

Signal and deflection board circuits.

Chroma I board

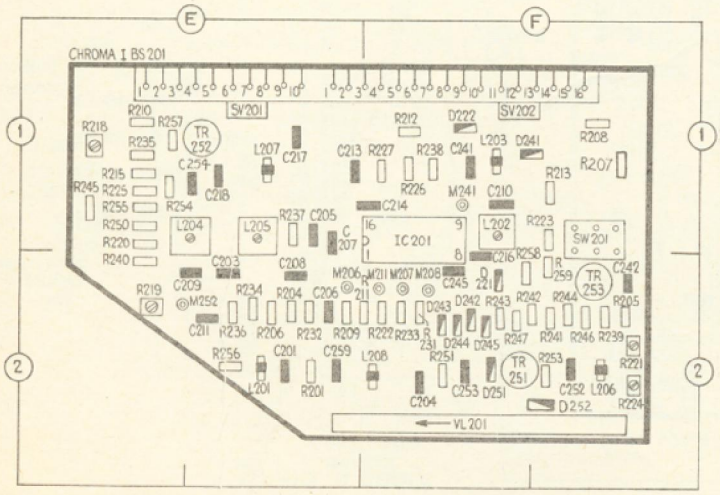

Chroma II board

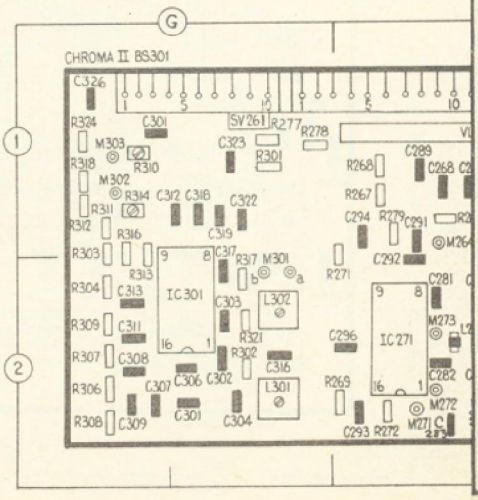

Trader SERVICE SHEET 3308/T431 Telefunken 712 CTV chassis (1)

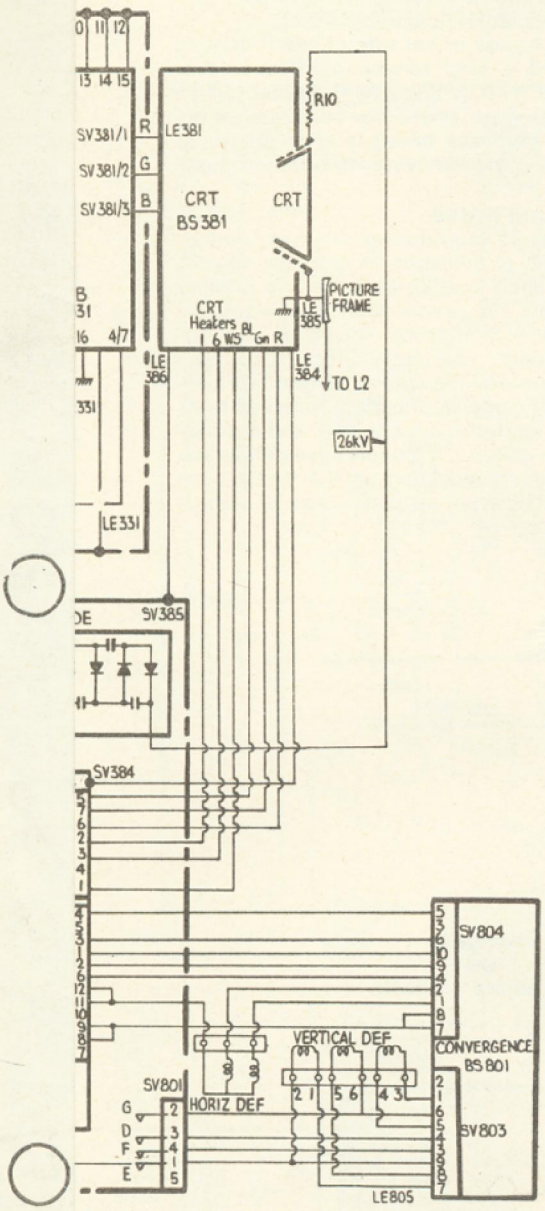

Components

VIDEO IF BOARD

Resistors

R103	6.8kΩ	B2
R104	4.3kΩ	B1
R106	15kΩ	B1
R110	220Ω	A1
R111	8.2kΩ	A1
R112	3.3kΩ	A2
R113	560Ω	A1
R114	330Ω	A1
R115	5.6Ω	A2
R116	3.9kΩ	A2
R121	150Ω	B2
R122	47kΩ	B2
R124	5kΩ*	B2
R126	180Ω	B2
R127	560Ω	B1
R128	5kΩ	B1
R129	1kΩ	B2
R133	68kΩ	B1
R131	150Ω	B2
R134	820kΩ	B1
R137	1.5kΩ	B1

* Variable

Capacitors

C101	1μF	A1
C102	68pF	B1
C103	0.22μF	B1
C104	0.1μF	A1
C105	10nF	B1
C110	56pF	A1
C111	4.7	A1
C112	68pF	A1
C113	4.7nF	A2
C114	75pF	A1
C115	470pF	A2
C116	56pF	A2
C117	15pF	A2
C118	22pF	A2
C119	27pF	A2
C120	12pF	A2
C121	75pF	A2
C122	47pF	A2
C123	56pF	A2
C125	47nF	B2
C126	22nF	B2
C127	22μF	B2
C128	47μF	B2
C129	4.7nF	B2
C131	4.7nF	B1
C133	4.7nF	B1
C134	27pF	B2
C135	10μF	B1
C136	150pF	B2
C137	0.1μF	B1
C139	69pF	B1

Transistors

Tr1118
BF199 A1

Integrated circuit

IC111
TDA440 B2

Diodes

D106
1N4148 B1

D107
1N4148 B1

IC104 ZTK33 B1

SOUND BOARD

Resistors

		Operator controls unit
R24	20kΩ	
R26	20kΩ	
R151	680Ω	D1
R152	47Ω	C1
R153	4.7Ω‡	C1
R154	47kΩ	D1
R155	3.9kΩ	D1
R156	6.8kΩ	D1
R157	100Ω‡	D1
R158	100kΩ	C1
R159	57Ω	D1
R161	1.5kΩ	C1
R162	1.5kΩ	C1
R163	1Ω	C1
R164	150Ω‡	D1
R166	100Ω	C1

* variable
‡ non-flam resistor

Capacitor

		Op. controls unit
C22	0.33μF	
C150	47nF	D1
C151	47nF	D1
C152	10nF	D1
C153	47nF	D1
C154	22nF	D1
C155	1μF	D1
C156	1μF	D1
C157	1.5nF	D1
C158	15nF	D1
C159	1000μF	C1
C160	47μF	D1
C161	100μF	D1
C162	0.15μF	D1
C163	100μF	D1
C164	0.1μF	D1
C165	0.1μF	C1
C166	680pF	C1
C167	4.7nF	C1
C168	1nF	C1
C169	220μF	C1
C171	0.1μF	C1
C172	100μF	C1

Integrated circuits

IC151
TBA120U D1

IC161
TBA800 C1

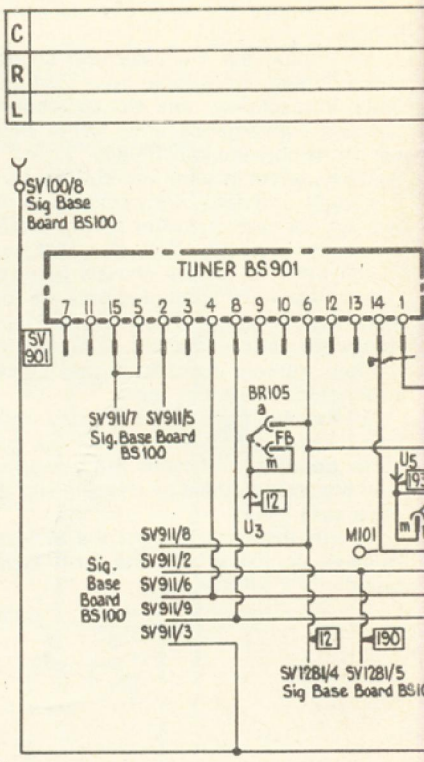

Video IF module

Diode

D151
BZX85CX13 C1

NLOTE: components shown dotted are in 7W version; components change as follows
R153-2.2Ω, R161-270Ω,
R162-390Ω, C158-0.1μF,
C168-1.2nF, C169-1000μF,
C171-0.22μF, IC161-TCA940

Resistors on operator's panel:
R21 25kΩ*
R22 25kΩ*
R23 25kΩ*
* variable

RGB board

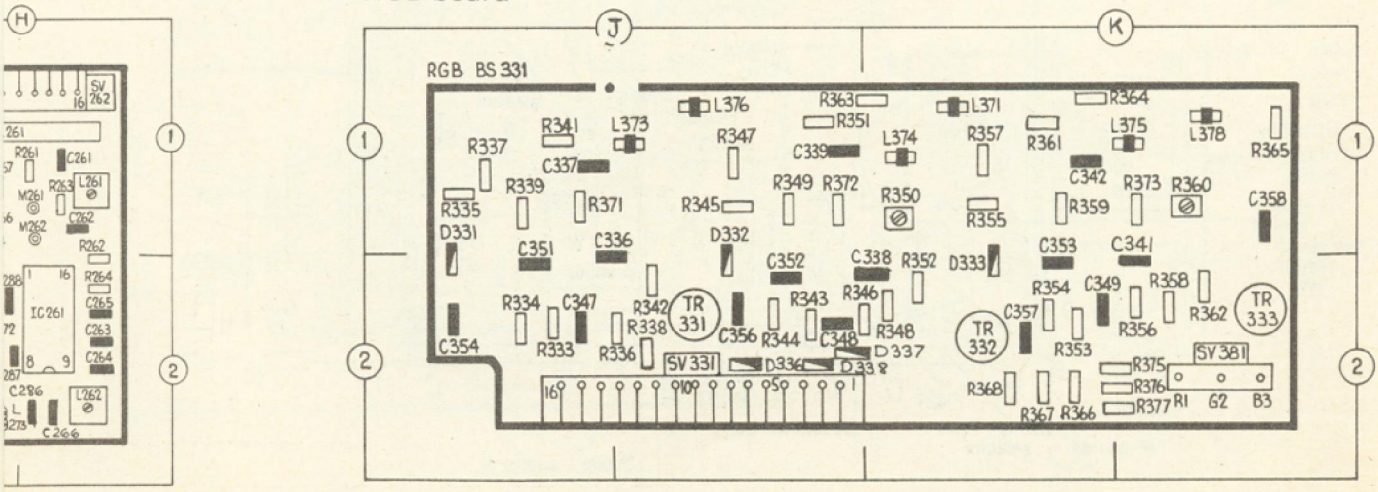

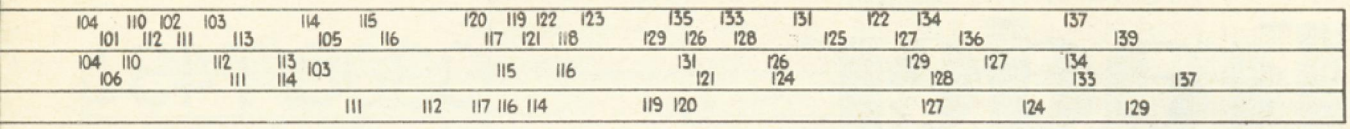

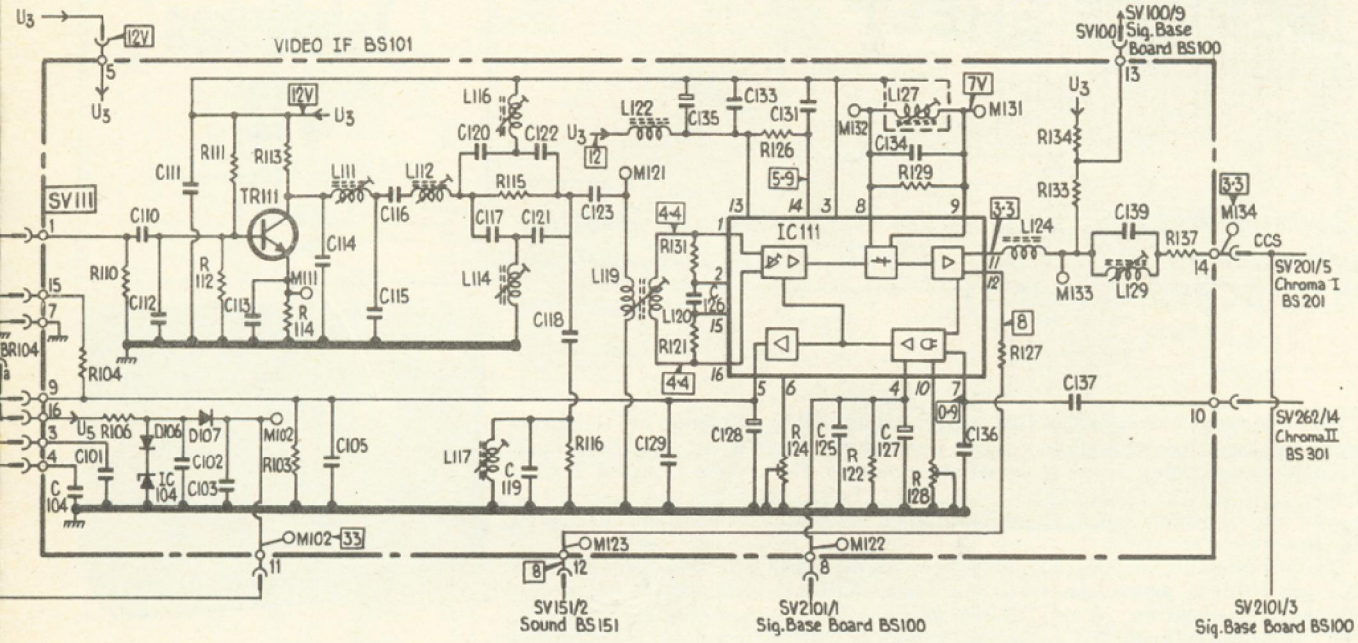

Sound module

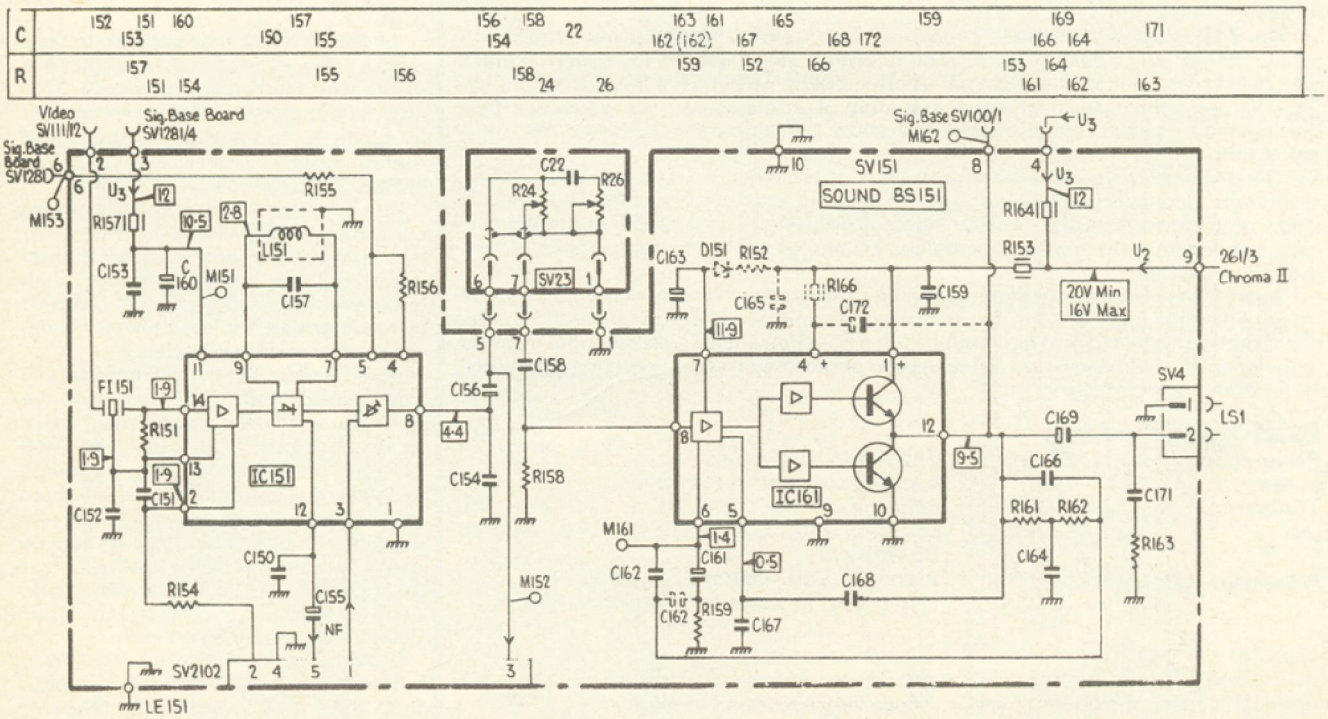

Printed in Great Britain by QB Ltd., Sheepen Place, Colchester, Essex CO3 3LJ. Telephone 77881 (10 lines), and Published by I.P.C. Electrical-Electronic Dorset House, Stamford Street, London SE1 9LU.

Supplement to Electrical and Electronic TRADER 12 April 1978

Trader SERVICE SHEET

3310/T431

Telefunken 712

Colour Television Chassis
Part 2

(Continued from TRADER Service Sheet 3308/T431)

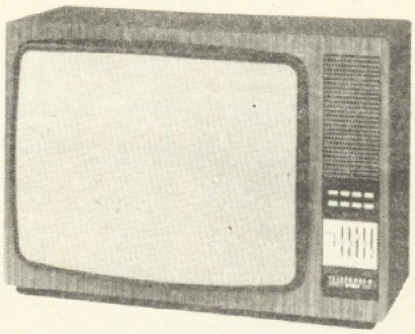

Setting-up Adjustments

Preliminaries
Check mains supply (240V); allow 30 minutes warm-up time. If testing receiver on a workbench, connect supply via a 600VA-rated mains isolation transformer.
Equipment required: Colour pattern generator, 50 kilohm/volt multimeter or VTVM, oscilloscope.
U3 voltage stabilisation Connect meter between test point M442 (U3 output from Power Supply II module, connector SV422 pin 4) and chassis. Adjust preset **R448** for 12V.
U1 voltage Set brightness, contrast and colour operator control sliders to minimum. Connect meter to M423 (pin 8 of SV421) Adjust preset **R429** for 163V.
Standard signal Inject colour bar signal via aerial socket. Adjust brightness, contrast and colour controls for normal room viewing. Connect oscilloscope to M134 on Video IF board (pin 14 of SV111).
Adjust preset **R128** for step pattern signal of 2.9V p-to-p. Adjust channel fine turner to give a 0.7V cyan bar display.
Horizontal hold With standard colour signal still injected, short-circuit two-pin plug SV532 on synchronism module. Adjust preset **R544** for horizontally-locked picture, then remove short-circuit from plug.
Vertical hold Inject standard colour signal. Adjust preset **R452** to centre of points of travel in which picture remains vertically locked. Check that when changing channels picture remains locked.
Height Inject a broadcast test card pattern. Adjust preset **R489** until picture just fills screen vertically.
Vertical linearity Adjust preset **R472** for optimum overall linearity.
Horizontal phase Short-circuit two-pin plug SV562 on E-W pincushion correction module. Adjust preset **R452** to centre picture horizontally without fold-overs at either side.
E-W pincushion Inject cross-hatch pattern from generator. Adjust preset **R517** on E-W pincushion module to give full width, and then adjust preset **R561** to correct trapezium distortion.
Width Re-adjust width by means of preset **R518** to give small overscan.
Video drive Inject colour bar signal. Set colour control to minimum. Connect oscilloscope to SV381 pin 1 on RGB board. Adjust brightness and contrast to give a 50V p-to-p signal on display.
Adjust green drive preset **R350** on RGB board to give 48V p-to-p signal. Then adjust blue drive preset **R360** to give 46V p-to-p signal on display.
Grey scale Inject colour bar signal. Set service switch S201 (on signal board) to service position. Adjust presets **R584** (green), **R583** (red) and **R582** (blue) on line module until horizontal red, green and blue lines are just visible. Return service switch to normal position.
Peak white Inject colour bar signal, set colour control to minimum. Adjust contrast and brightness controls to give correct white-to-black grey scale "steps". Adjust colour amplifier presets **R350** (green) and **R360** (blue) to give standard white (equivalent to monochrome white).
Focus Adjust focus control **R581** for best resolution under normal room viewing conditions in central part of picture.

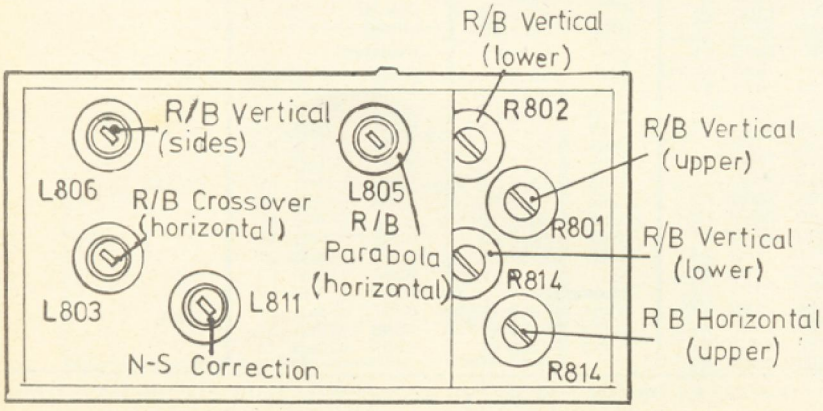

Convergence *(20AX crt receivers)*

Preliminaries Allow receiver and pattern generator to warm up for about 15 minutes. During the warm-up period, switch to a no-signal channel so that an unmodulated raster is produced to allow uniform heating of the shadowmask. If possible use a pattern generator having an "all-red" raster facility; if this not available, set the blue **(R582)** and green **(R584)** crt screen-grid controls (on the line module) to minimum to obtain an all-red raster.
(See crt neck-cluster diagram)
1. Check that horizontal lines are parallel with tube top and bottom edges. If necessary, slacken deflection coil yoke toggles (1), and rotate yoke
2. Check picture geometry. Adjust centre horizontal line for precise linearity, using control (2).
3. *Colour purity* obtain "all-red" raster. Release deflector coil yoke toggles (1) and rotate lugs (6) to push coils forward on to crt neck flare until a red area

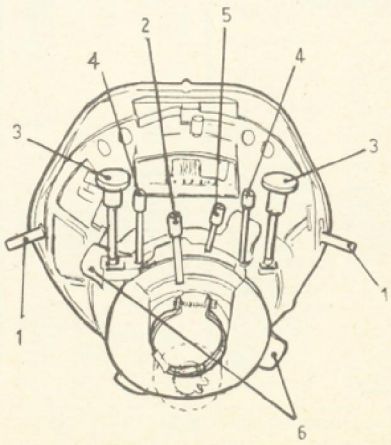

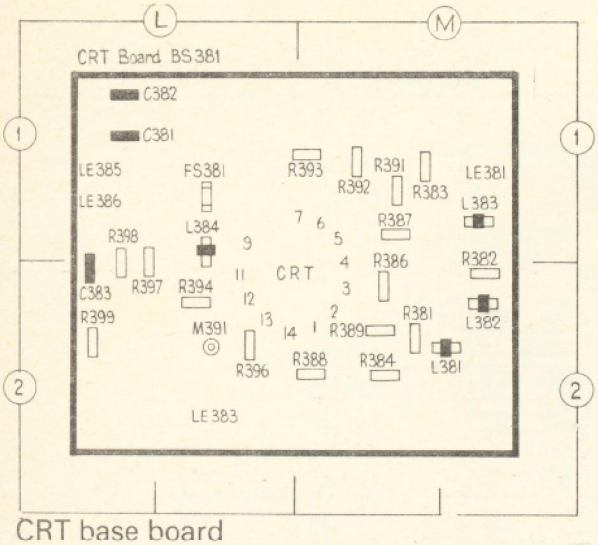

CRT base board

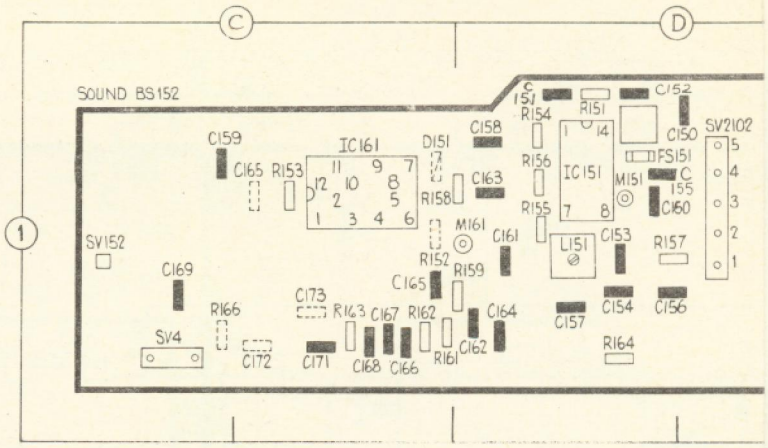

Sound board

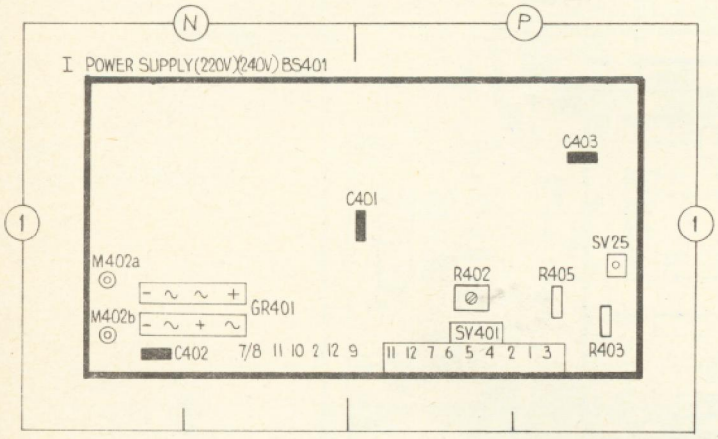

Power supply I board

Vertical oscillator board

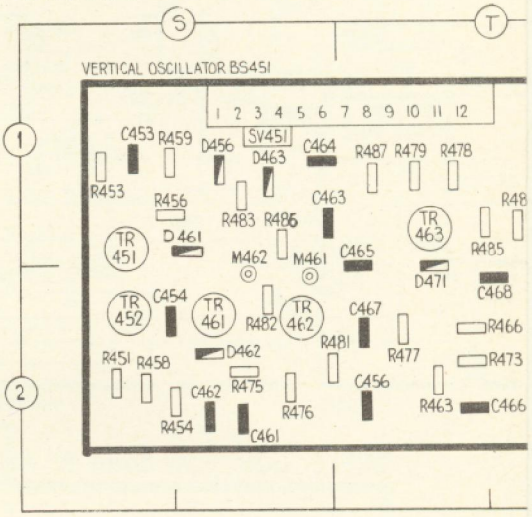

appears on the screen. Then rotate knob (5) until the red area is central in the screen. Bring the deflector coils back, using lugs (6), until the red area fills the screen, and restore toggles (1) to lock deflector coils.

4. *Static convergence* Restore blue and green rasters. Use a single crossed-line pattern if available, together with a crossed-line "dot" pattern. Converge red and green lines to superimpose in both planes at screen centre, using red/green horizontal controls (4) and red/green vertical controls (3). Check if possible using single dot at screen centre with brightness suitably reduced.

5. *Dynamic convergence* (see convergence unit controls diagram)

Mount convergence unit in service position at cabinet top rear (see "Dismantling" and interior view diagram on TRADER service sheet 3308/T431). Select cross-hatch pattern.

The purpose of dynamic convergence with the 20AX crt is to superimpose the blue lines on the static-converged red and green lines. Hence all controls on the convergence unit affect only *blue* lines. Any tendency for red and green lines to diverge at screen edges can be compensated by *slight* re-adjustment of the appropriate static convergence controls.

The functions and effect of each coil and preset in the convergence unit are shown on the diagram.

Power supply II board

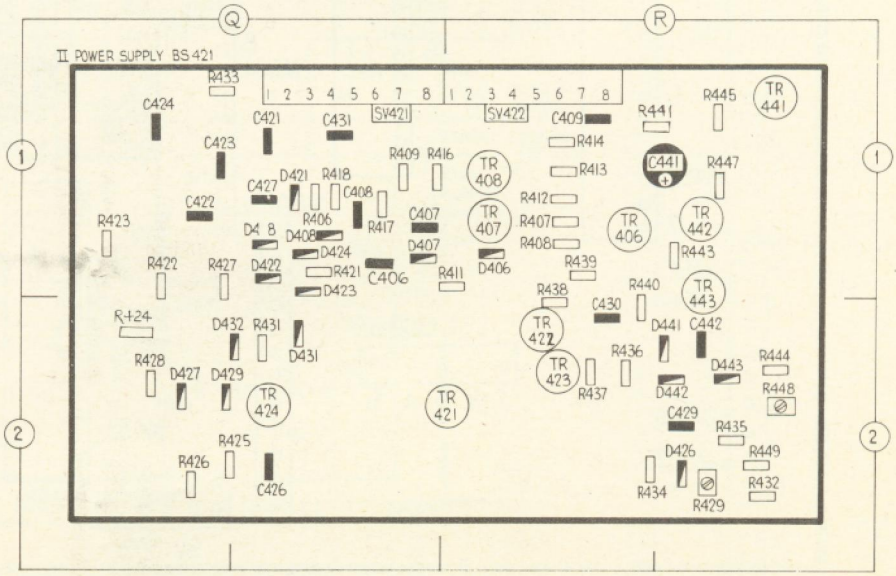

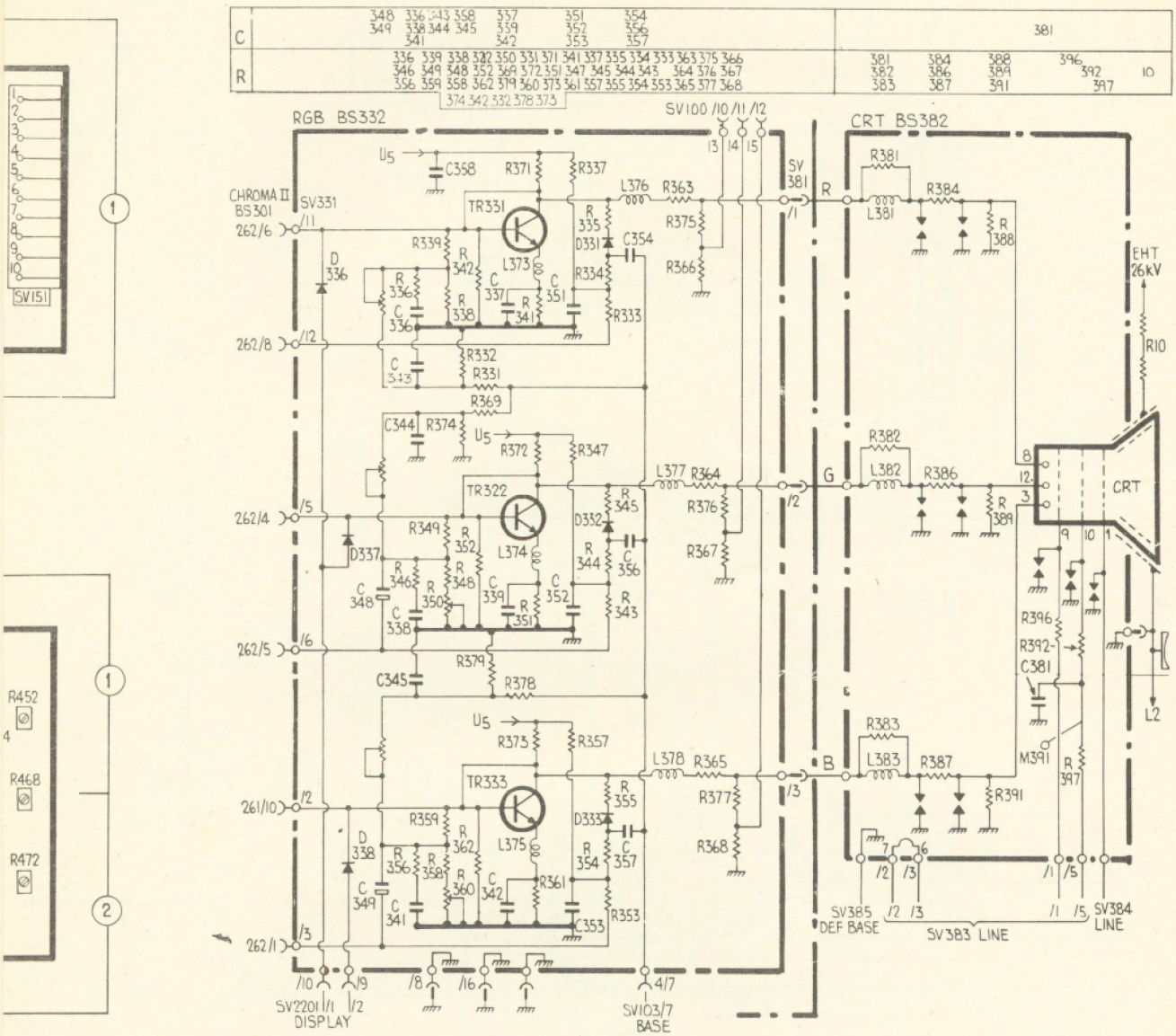

RGB and CRT circuit (PIL crt)

Vertical output board

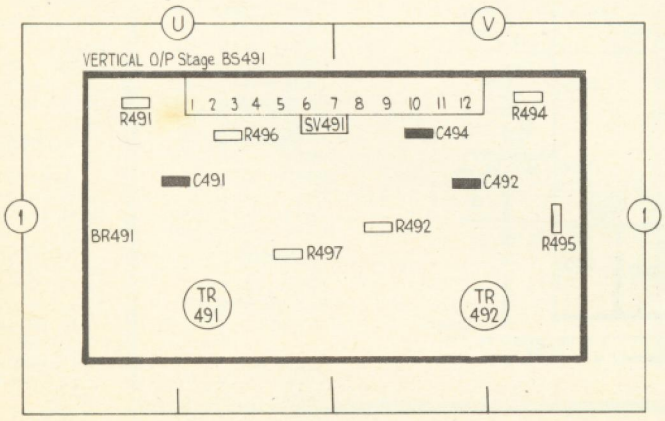

RGB BOARD (PIL crt)
Note: *Locations of components are similar to those of the 20AX version board except for some extra components and some deleted. As this board is not illustrated, refer to co-ordinates on the 20AX list and to the layout plan given in TRADER sheet 3308/T431*

Resistors

R332	1kΩ
R333	10kΩ
R334	120kΩ
R335	1kΩ
R336	150Ω
R337	1.8MΩ
R338	470Ω
R339	39kΩ
R341	82Ω
R342	1kΩ
R343	10kΩ
R344	120kΩ
R345	1kΩ
R346	150Ω
R347	1.8MΩ
R348	270Ω
R349	39kΩ
R351	82Ω
R352	1kΩ
R353	10kΩ
R354	120kΩ
R355	1kΩ
R356	150Ω
R357	1.8MΩ
R358	220Ω
R359	39kΩ
R360	500Ω*
R361	82Ω
R362	1kΩ
R363	1kΩ
R364	1kΩ
R365	1kΩ
R366	12kΩ
R367	12kΩ
R368	12kΩ
R369	91kΩ
R371	62kΩ
R372	6.2kΩ
R373	6.2kΩ
R374	1kΩ
R375	180kΩ
R376	180kΩ
R377	180kΩ
R378	91kΩ
R379	1kΩ

* variable

Capacitors

C336	47pF
C337	1nF
C338	47pF
C339	1nF
C341	56pF
C342	1nF
C343	47pF
C344	56pF
C345	68pF
C348	4.7μF
C349	4.7μF
C351	0.33μF
C352	0.33μF
C353	0.33μF
C354	10nF
C356	10nF
C357	10nF

Transistors

Tr331	BF258
Tr332	BF258
Tr233	BF258

Diodes

D331	BA173
D332	BA173
D333	BA173
D336	1N4148
D337	1N4148
D338	1N4148

CRT BASE

Resistors

R10	2 x 22kΩ
R381	10kΩ
R382	10kΩ
R383	10kΩ
R384	1kΩ
R386	1kΩ
R387	1kΩ
R388	1MΩ
R389	1MΩ
R391	1MΩ
R392	10kΩ
R396	1kΩ
R397	470kΩ

Capacitors

C381	68nD

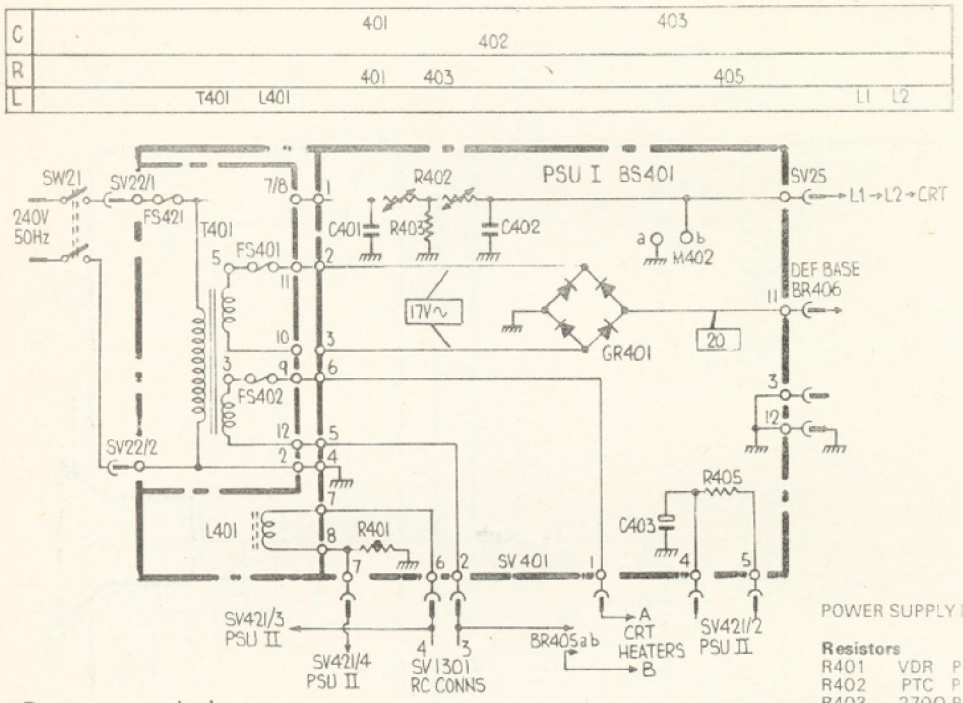

Power supply I

POWER SUPPLY I

Resistors

R401	VDR	P1
R402	PTC	P1
R403	270Ω	P1
R405	12Ω	P1

Capacitors

C401	0.47μF	P1
C402	0.1μF	N1
C403	1000μF	P1

Rectifier

Gr401	B40 N1
C3200/2200	

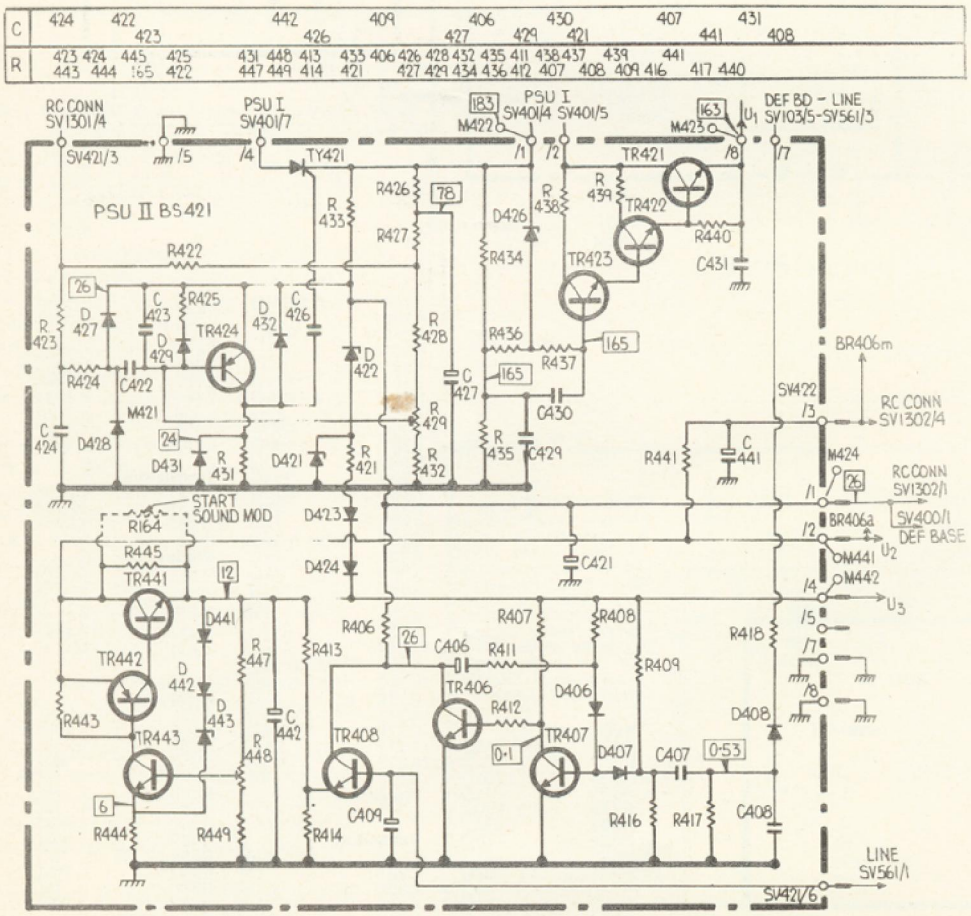

Power Supply II

POWER SUPPLY II

Resistors

R406	220Ω	Q1
R407	10kΩ	R1
R408	220kΩ	R1
R409	390kΩ	Q1
R411	27kΩ	R1
R412	10kΩ	R1
R413	330Ω	R1
R414	82Ω	R1
R416	27kΩ	Q1
R417	1.5MΩ	Q1
R421	47Ω	Q1
R422	82kΩ	Q1
R423	5.6kΩ	Q1
R424	6.8kΩ	Q2
R425	680Ω	Q2
R426	12kΩ	Q2
R427	4.7kΩ	Q1
R428	1kΩ	Q2
R429	500Ω*	R2
R431	10kΩ	Q2
R432	1.8kΩ	Q
R433	27kΩ	Q1
R434	56kΩ	R2
R435	470kΩ	R2
R436	33kΩ	R2
R437	33kΩ	R2
R438	330Ω	R1
R439	22Ω	R1
R440	33Ω	R1
R441	1.8kΩ	R1
R443	10kΩ	R1
R444	1kΩ	R2
R445	4.7kΩ	R1
R447	1.8kΩ	R1
R448	500Ω*	R2
R449	2kΩ	R2

* Variable

Capacitors

C406	4.7μF	Q1
C407	1nF	Q1
C408	0.1μF	Q1
C409	100μF	
C421	220μF	
C422	0.56μF	
C423	1μF	
C424	0.47μF	
C426	0.47μF	
C427	10μF	
C429	2.2μF	
C430	100pF	
C431	0.22μF	
C441	2200μF	
C442	22μF	

Transistors

Tr406	BC237
Tr407	BC238
Tr408	BC237
Tr421	2N3055
Tr422	BD13
Tr423	BC182
Tr424	BC307
Tr441	2N5294
Tr442	BC30
Tr443	BC23

Diodes

D406	1N4148
D407	1N4148
D408	1N4148
D421	BZY85 C1
D422	BZY85 C1
D423	1N4148
D424	1N4148
D426	BZX79 C4
D427	1N4148
D428	1N4148
D429	1N4148
D431	1N4148
D432	1N4002
D441	1N4148
D442	1N4148
D443	BZY85 C4 V

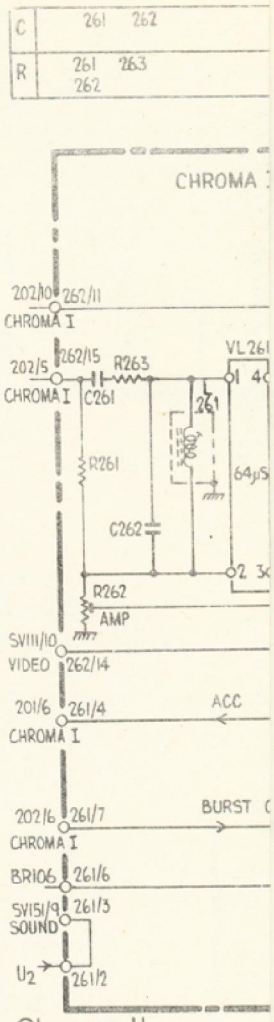

Chroma II

Trader SERVICE SHEET 3310/T431 Telefunken 712 CTV chassis (2)

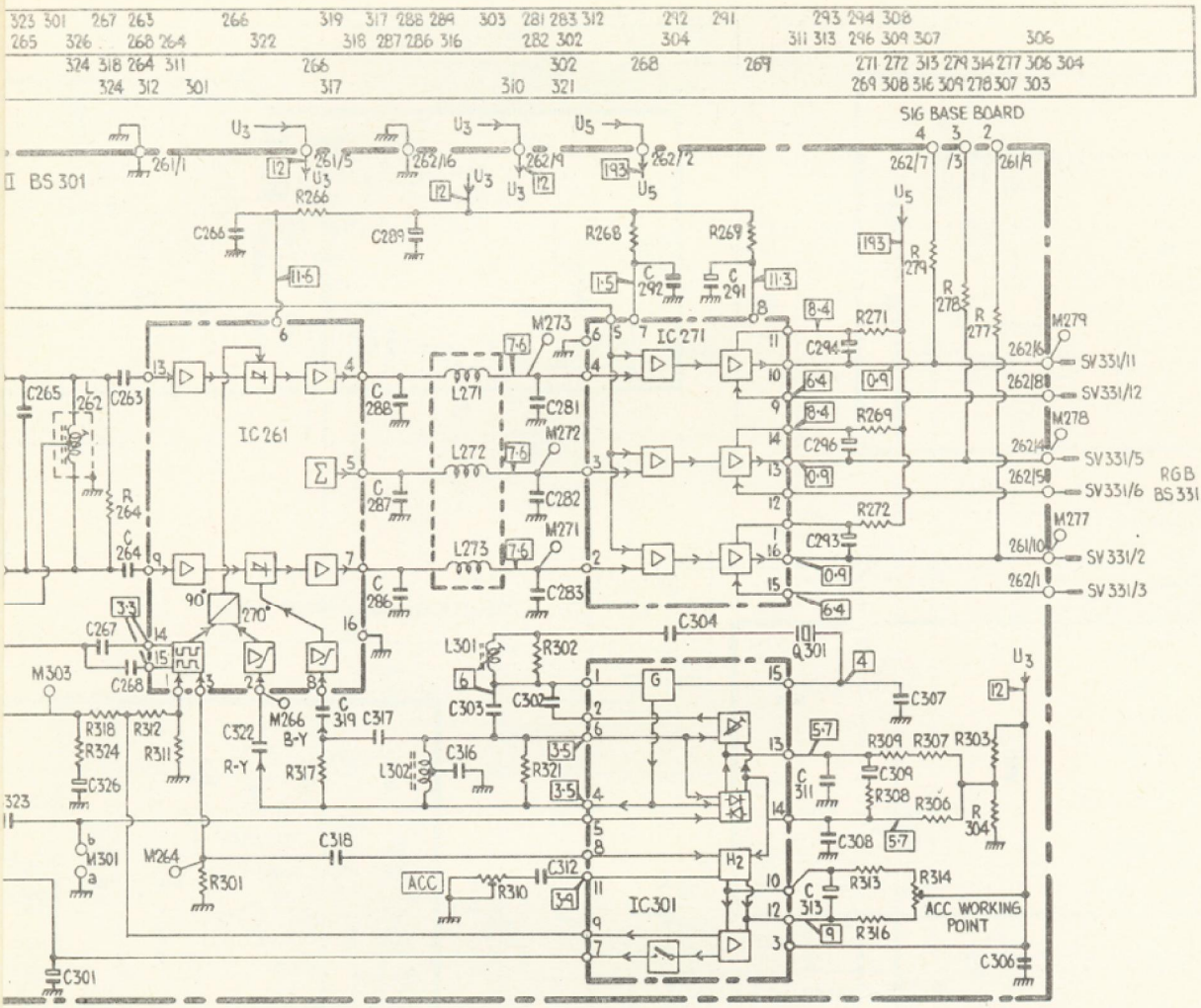

DEFLECTION Base Board BS400.

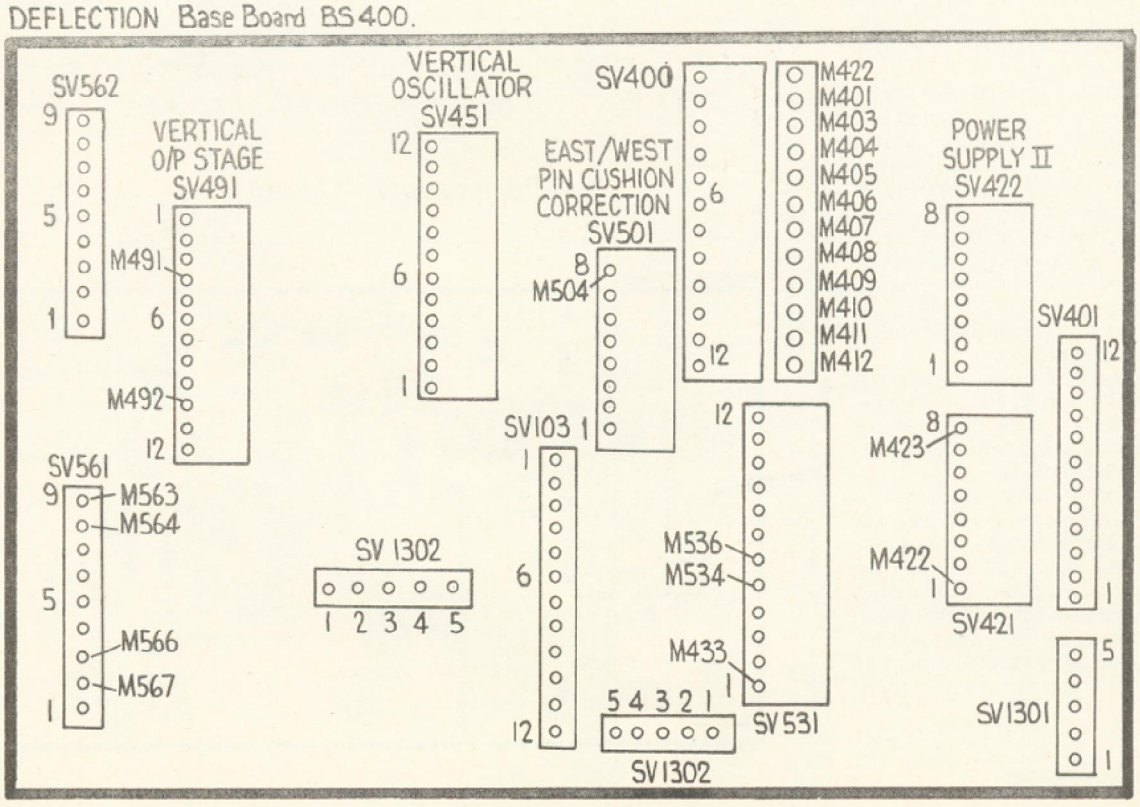

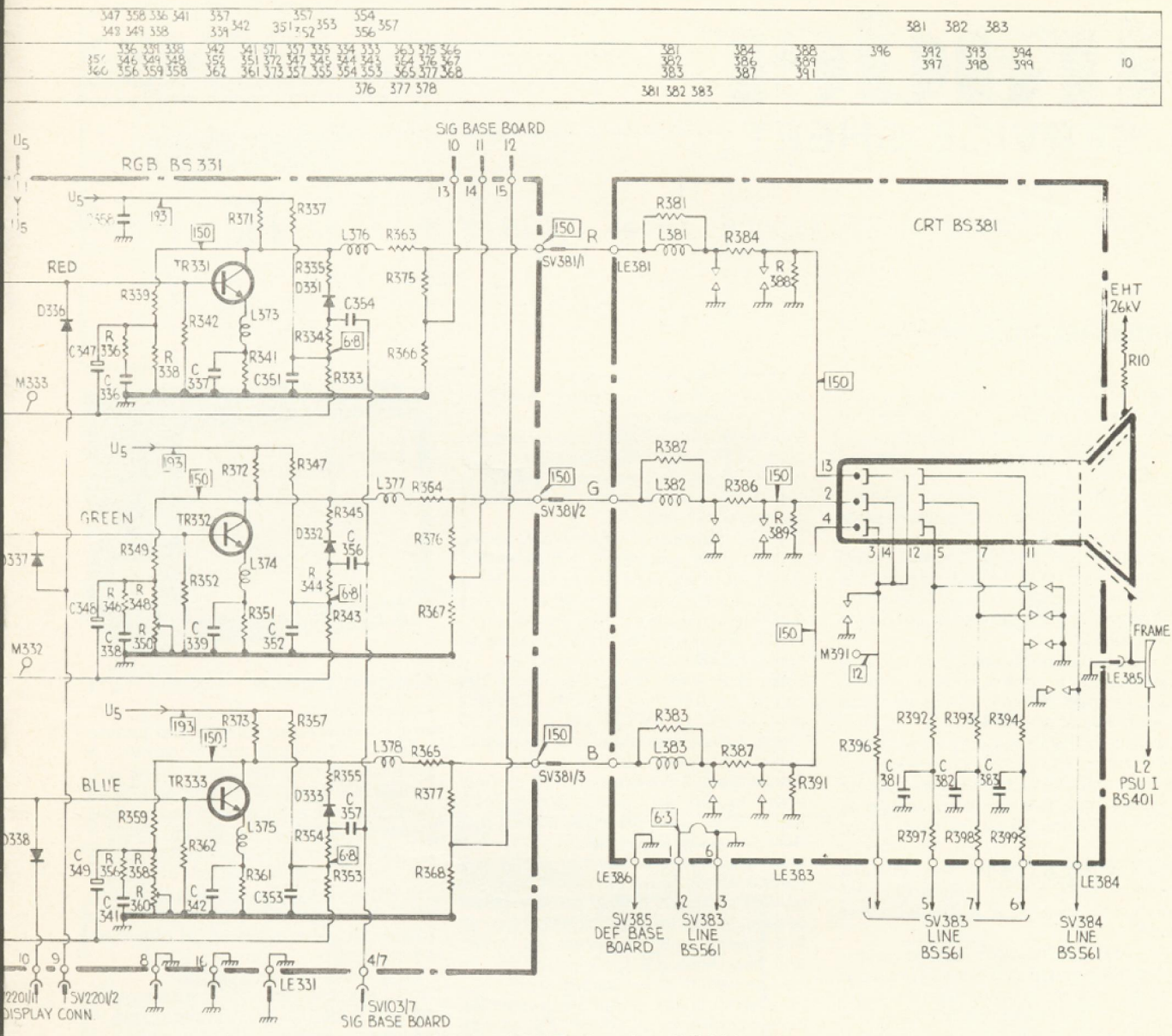

RGB and CRT circuits (20AX crt)

R314	50kΩ*	G1
R316	27kΩ	G1
R317	1.1kΩ	G2
R318	12kΩ	G1
R321	2.2kΩ	G2
R324	1kΩ	G1

variable

Capacitors

C261	10nF	H1
C262	120pF	H1
C263	330pF	H2
C264	330pF	H2
C265	10pF	H2
C266	47μF	H2
C267	10nF	H1
C268	10nF	H1
C281	56pF	H2
C282	56pF	H2
C283	56pF	H2
C286	15pF	H2
C287	15pF	H2
C288	15pF	H2
C289	22μF	H1
C291	10μF	H1
C292	4.7nF	H2
C293	10nF	H2
C294	0.1μF	H1
C296	0.1μF	H2
C301	47μF	G1
C302	33pF	G2
C303	18pF	G2
C304	22pF	G2
C306	0.1μF	G2
C307	15pF	G2
C308	0.33μF	G2
C309	47μF	G2
C311	0.33μF	G2
C312	0.1μF	G1
C313	4.7μF	G2
C316	0.1μF	G2
C317	39pF	G2
C318	0.33μF	G1
C319	10nF	G1
C322	10nF	G1
C323	1nF	G1
C326	4.7μF	G1

Integrated circuits

IC261	TBA520	H2
IC271	TBA530	H2
IC301	TBA540	G2

RGB BOARD (20AX)

Resistors

R333	10kΩ	J2
R334	120kΩ	J2
R335k	1kΩ	J1
R336	100Ω	J2
R337	1.8MΩ	J1
R338	390Ω	J2
R339	39kΩ	J1
R341	82Ω	J1
R342	1kΩ	J2
R343	10kΩ	J2
R344	120kΩ	J2
R345	1kΩ	J1
R346	100Ω	K2
R347	1.8MΩ	J1
R348	330Ω	K2
R349	39kΩ	J1
R350	250Ω*	K1
R351	82Ω	J1
R352	1kΩ	K2
R353	10kΩ	K2
R354	120kΩ	K2
R355	1kΩ	K1
R356	100Ω	K2
R357	1.8MΩ	K1
R358	330Ω	K2
R359	39kΩ*	K1
R360	250Ω*	K1
R361	82Ω	K1
wR362	1kΩ	K2
R363	1kΩ	J1
R364	1kΩ	K1
R365	1kΩ	K1
R366	15kΩ	K2
R367	15kΩ	K2
R368	15kΩ	K2
R371	4.7Ω	J1
R372	4.7kΩ	J1
R373	4.7kΩ	K1
R375	180kΩ	K2
R376	180kΩ	K2
R377	180kΩ	K2

Capacitors

C336	47pF	J1
C337	1nF	J1
C338	47pF	K2
C339	1nF	J1
C341	68pF	K2
C342	1nF	K1
C347	4.7μF	J2
C348	4.7μF	J2
C349	4.7μF	K2
C351	0.33μF	J2
C352	0.33μF	J2
C353	0.33μF	K1
C354	10nF	J2
C356	10nF	J2
C357	10nF	K2
C358	0.1uF	K1

Transistors

Tr331	BF258	J2
Tr332	BF258	K2
Tr233	BF258	K2

Diodes

D331	BA173	J1
D332	BA173	J1
D333	BA173	K2
D336	1N4148	J2
D337	1N4148	K2
D338	1N4148	J2

CRT BASE BOARD (20AX)

Resistors

R381	10kΩ	M2
R382	10kΩ	M2
R383	10kΩ	M1
R384	1kΩ	M2
R386	1kΩ	M2
R387	1kΩ	M1
R388	1MΩ	M2
R389	1MΩ	M2
R391	1MΩ	M1
R392	10kΩ	M1
R393	10kΩ	M1
R394	10kΩ	L2
R396	1kΩ	L2
R397	470kΩ	L2
R398	470kΩ	L1
R399	470kΩ	L2

Capacitors

C381	10nF	L1
C382	10nF	L1
C383	10nF	L2

NB: EHT Series resistor R10 (2 x 22kΩ) is in CRT anode lead.

Printed in Great Britain by QB Ltd., Sheepen Place, Colchester, Essex CO3 3LJ. Telephone 77881 (10 lines), and Published by I.P.C. Electrical-Electronic Press Ltd., Dorset House, Stamford Street, London SE1 9LU.

Supplement to Electrical and Electronic TRADER 12 April 1978

Trader SERVICE SHEET

3311/T431

Telefunken 712

Colour Television Chassis

Part 3

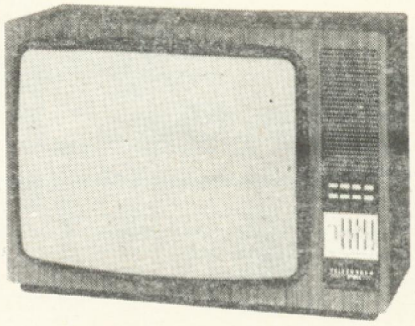

(Continued from TRADER Service Sheet 3310/T431)

This TRADER Service Sheet completes the set of three giving all information on the basic 712 chassis, but it does not include alignment and colour decoder setting instructions. Further details of these, together with circuits and diagrams of the various extra feature boards and alternatives, will be given in a later TRADER sheet.

No special setting-up and convergence instructions for the 712 PIL crt chassis are available at this stage. However, convergence for a PIL crt receiver is fairly simple, consisting of obtaining colour purity and static convergence using the deflection coil controls, with two simple correction controls in the convergence correction modules.

Interconnection diagram

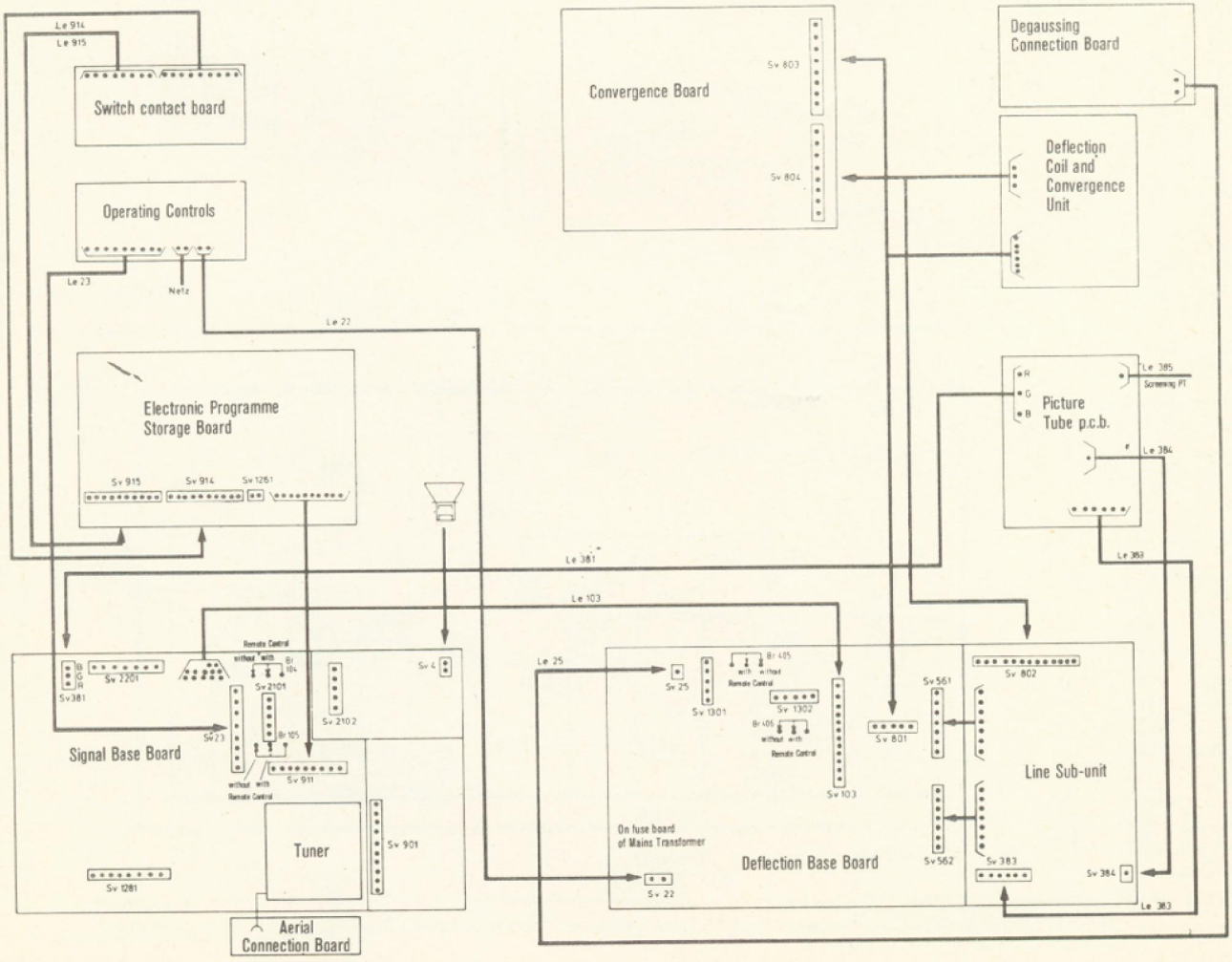

Trader SERVICE SHEET 3311/T431 Telefunken 712 CTV chassis (3)

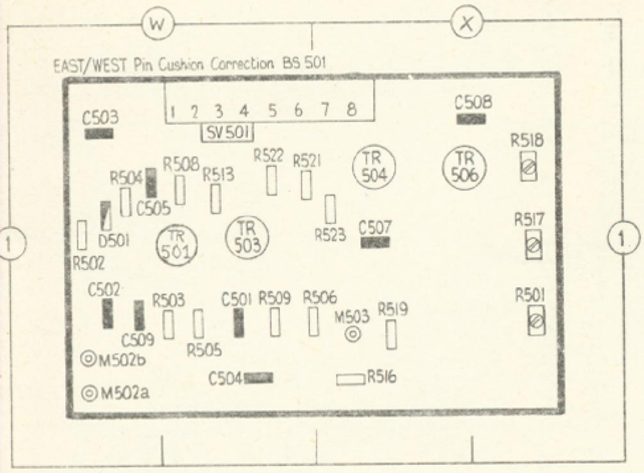

E-W pincushion correction board

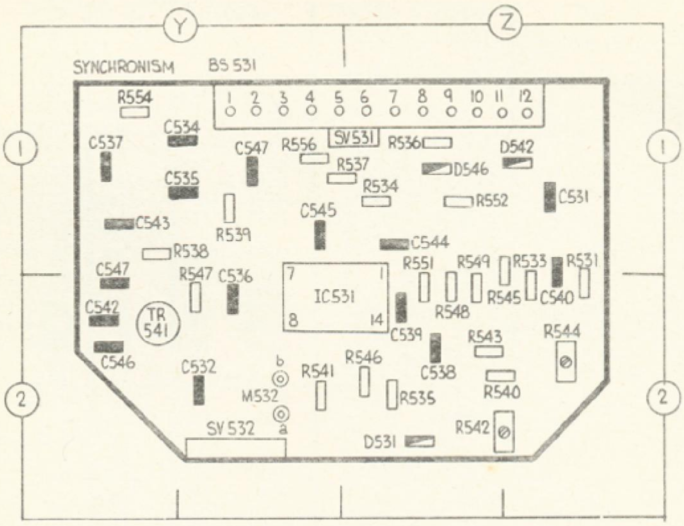

Synchronism board

Electronic tuner

C	01 04 82 03 08 07 06 09 10 58 12 11 14 17 63 18 20 22 21 23 24 26 31 27 29 75 81 02 83 50 51 52 53 54 05 55 60 56 59 56 13 57 15 62 61 16 65 66 32 64 67 68 25 69 70 71 73 72 74 28 30 76 33
R	01 02 03 04 05 07 08 09 10 11 13 14 15 16 17 18 19 20 21 22 23 06 51 52 53 54 55 56 58 57 59
L	51 04 01 03 53 06 10 07 09 57 16 14 LII 17 18 60 20 19 62 22 24 64 65 67 02 50 52 05 55 56 11 08 LI 40 15 13 12 58 41 59 61 20 23 63 66

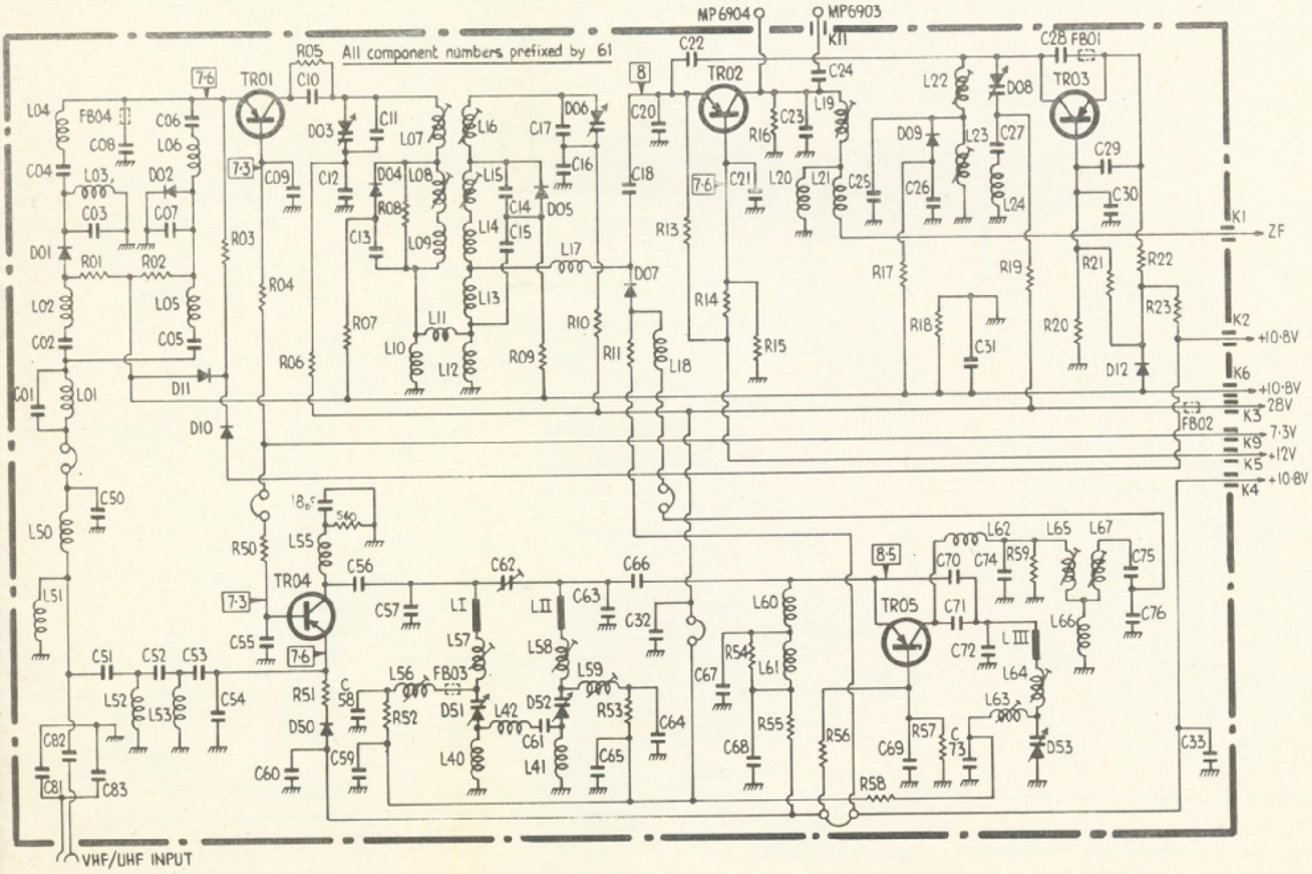

ELECTRONIC TUNER
ET176 K/68

NOTE: all components are prefixed "61"

Resistors

R01	3.9Ω
R02	3.9Ω
R03	850Ω
R04	470Ω
R05	680Ω
R06	47kΩ
R07	47kΩ
R08	12kΩ
R09	4.7kΩ
R10	47kΩ
R11	4.7kΩ
R13	2.2kΩ
R14	4.7kΩ
R15	8.2kΩ
R16	6.8kΩ
R17	4.7kΩ
R18	1.2MΩ
R19	47kΩ
R20	5.6kΩ
R21	4.3kΩ
R22k	3kΩ
R23	1.2kΩ
R51	1kΩ
R52	47kΩ
R53	47kΩ
R54	180Ω
R55	1kΩ
R56	1kΩ
R57	3.9kΩ
R58	47kΩ
R59	2.7kΩ

Capacitors

C01	150pF
C02	2.7pF
C03	39pF
C04	8.2pF
C05	62pF
C06	39pF
C07	47pF
C08	47pF
C09	33pF
C10	4.7nF
C11	3.3pF
C12	68pF
C13	4.7nF
C14	2.2pF
C15	4.7nF
C16	68pF
C17	3.3pF
C18	160pF
C20	7.5pF
C21	470pF
C22	1.8pF
C23	5pF
C24	2.2pF
C25	3.9pF
C26	4.7nF
C27	22pF
C28	2.8pF
C29	15pF
C30	45pF
C33	4.7nF
C50	15pF
C51	4.7pF
C52	2.7pF
C53	4.7pF
C54	2.5pF
C55	12pF
C56	33pF
C57	5pF
C58	4.7nF
C59	4.7nF
C60	4.7nF
C61	18pF
C62 not quoted *	
C65	4.7nF
C64	47pF
C66	1.2pF
C67	33pF
C68	62pF
C69	160pF
C70	6.8pF
C71	5.5pF
C72	1.8pF
C73	4.7nF
C74	2pF
C75	15pF
C76	120pF

* variable

Transistors

Tr01	AF239S
Tr02	AF106
Tr03	AF139
Tr04	AF279
Tr05	AF239S

Diodes

(Types not quoted)

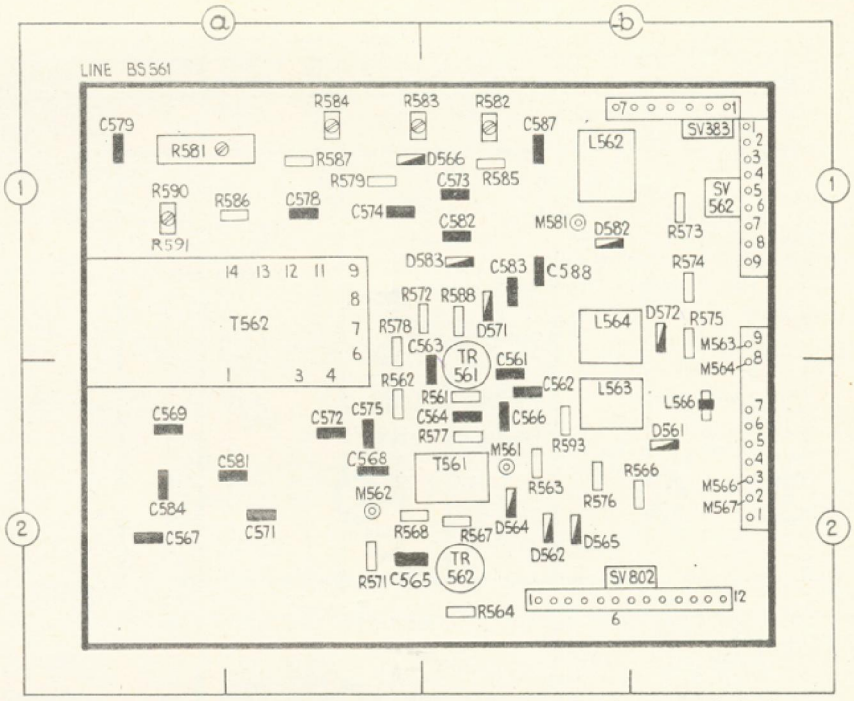

Line module board

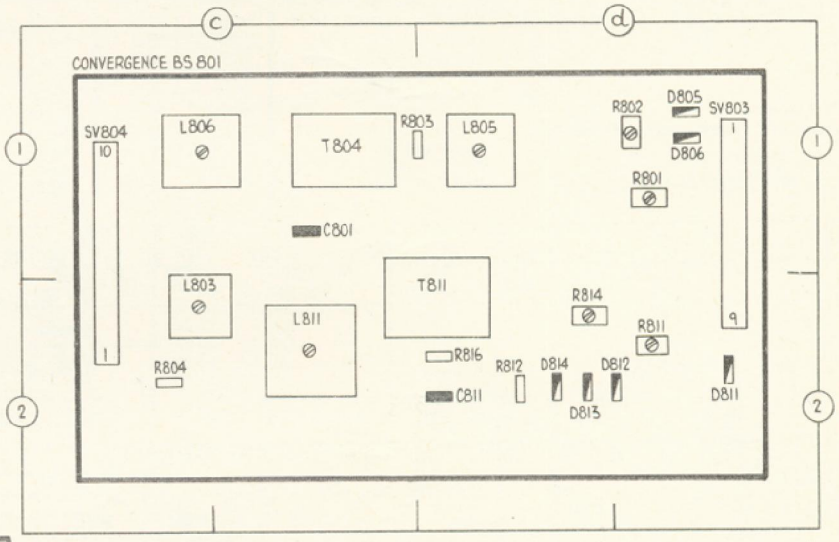

Convergence unit

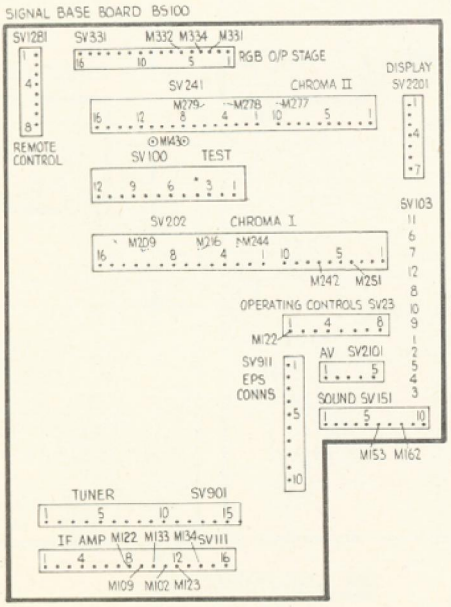

Signal base board

No details can be given at this stage of the various types of programme indicator, storage and remote control channel selection systems. These will be covered in a future TRADER sheet.

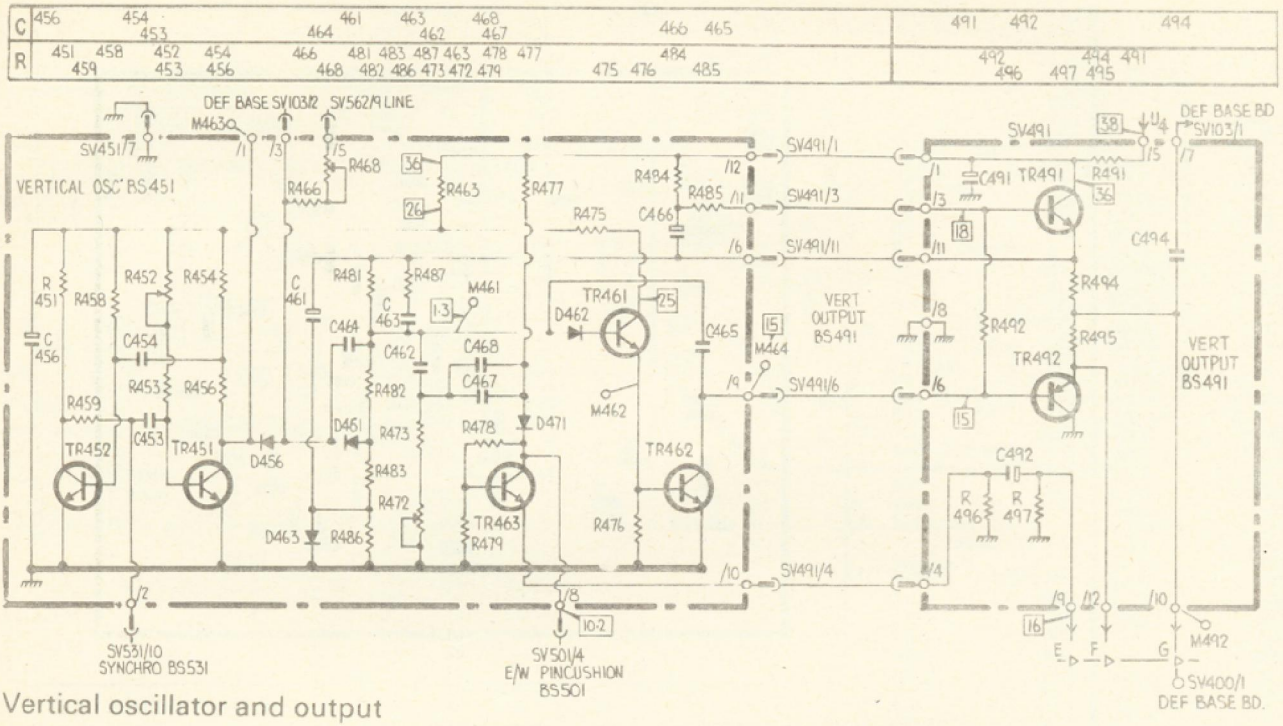

Vertical oscillator and output

LINE AND CORRECTION MODULES (PIL CRT) (not illustrated — however, line module layout is similar to that for the 20AX version)

Resistors

R561	470Ω
R562	82Ω
R563	22Ω
R564	82Ω
R566	3.9Ω
R567	33Ω
R568	0.75Ω
R569	20Ω
R571	5.6kΩ
R572	6.8kΩ
R574	10kΩ
R575	1kΩ
R576	5.6kΩ
R577	68kΩ
R578	1kΩ
R579	2.2Ω
R581	90MΩ Focus
R582	1MΩ*
R585	1MΩ*
R586	100kΩ
R587	390kΩ
R588	33kΩ
R589	1kΩ
R593	820Ω

*variable

Capacitors

C561	4.7μF
C562	1.5nF
C563	120pF
C564	68nF
C565	2.2nF
C567	10μF
C568	470μF
C571	47μF
C572	0.47μF
C573	10μF
C574	330pF
C575	10nF
C578	47nF
C581	0.82μF
C582	39nF

Line and correction (PIL)

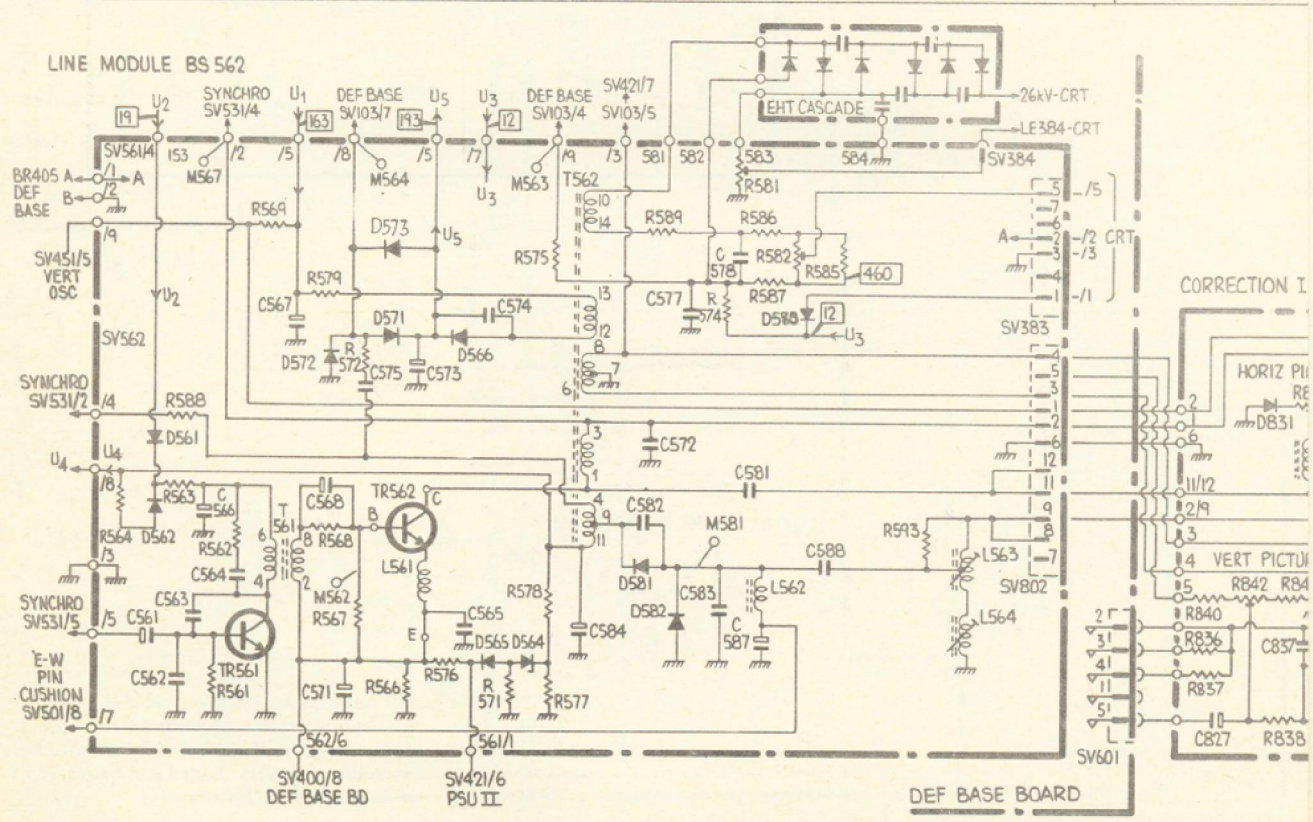

Trader SERVICE SHEET 3311/T431 Telefunken 712 CTV chassis (3)

VERTICAL OSCILLATOR

Resistors

R451	1.5kΩ	S2
R452	100kΩ*	T1
R453	100kΩ	S1
R454	220Ω	S2
R456	1kΩ	S1
R458	27kΩ	S2
R459	3.9kΩ	S1
R463	470Ω	T2
R466	220kΩ	T2
R468	500kΩ*	T1
R472	50kΩ*	T2
R473	10kΩ	T2
aR475	2.2kΩ	S2
R476	4.7kΩ	S2
R477	1kΩ	T2
R478	15kΩ	T1
R479	1.2kΩ	T1
R481	390kΩ	T2
R482	33kΩ	S2
R483	330kΩ	S1
R484	150Ω	T1
R485	150Ω	T1
R486	1kΩ	S1
R487	8.2kΩ	T1

* variable

Capacitors

C453	0.68μF	S1
C454	0.22μF	S2
C456	100μF	T2
C461	0.47μF	S2
C462	0.47μF	S2
C463	0.1μF	S1
C464	47μF	S1
C465	6.8nF	T1
C466	100μF	T2
C467	0.47μF	T2
C468	0.1μF	T2

Transistors

Tr451	BC237B	S1
Tr452	BC237A	S2
Tr461	BC237B	S2
Tr462	BD135	S2
Tr463	BC237A	T1

Diodes

D456	1N4148	S1
D461	1N4148	S1
D463		S1
D462	1N4148	S2
D471	1N4148	T2

VERTICAL OUTPUT

Resistors

R491	2.7Ω	U1
R492	56Ω	V1
R494	3.3Ω	V1
R495	3.3Ω	V1
R496	0.33Ω	U1
R497	470Ω	U1

Capacitors

C491	2200μF	U1
C492	2200μF	V1
C494	0.33μF	V1

Transistors

Tr491	BD311	U1
Tr492	BD312	V1

LINE MODULE

Resistors

R561	470Ω	b2
R562	82Ω	a2
R563	22Ω	b2
R564	82Ω	b2
R566	3.9Ω	b2
R567	33Ω	b2
R568	0.75Ω	a2
R569	20Ω	Chassis mntd.
R571	5.6kΩ	a2
R572	6.8kΩ	a1
R573	39kΩ	b1
R574	8.2kΩ	b1
R575	1kΩ	b1
R576	5.6k	b2
R577	6.8kΩ	b2
R578	1k	a1
R579	6.8Ω	a1
R581	90MΩ (Focus)	a1
R582	1MΩ*	b1
R583	1MΩ*	a1
R584	1MΩ*	a1
R585	330kΩ	b1
R586	330kΩ	a1
R587	270kΩ	a1
R588	33kΩ	b1
R589	2.2kΩ*	a1
R590	2.2kΩ*	a1
R593	820Ω	b2

*variable

Capacitors

C561	4.7μF	b2
C562	1.5nF	b2
C563	120pF	b2
C564	68nF	b2
C565	2.2nF	a2
C566	22μF	b2
C567	10μF	a2
C568	470μF	a2
C569	10nF	a2
C571	47μF	a2
C572	0.47μF	a2
C573	10μF	b1
C574	330pF	a1
C575	10nF	a2
C578	47nF	a1
C579	68nF	a1
C581	0.82μF	a2
C582	56nF	b1
C583	470pF	b1
C584	1000μF	a2
C587	10μF	b1
C589	1μF	b1

Transistors

Tr561	BC431	b2
Tr562	BU208	b2

Diodes

D561	1N4001	b2
D562	1N4001	b2
D564	BCY85 C33	b2
D565	1N4148	b2
D566	1P645	b1
D571	BY201/3	b2
D572	BY201/3	b1
D582	SKE462/04	b1
D583	BY211	b1

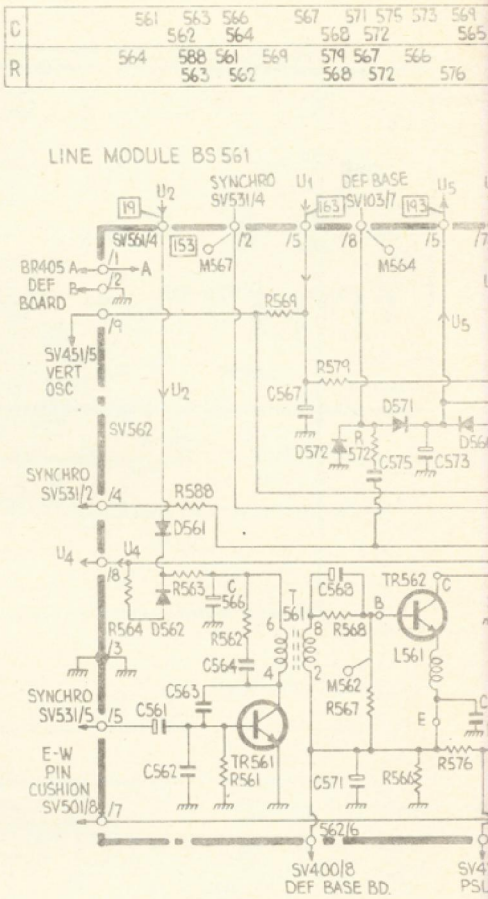

C584	100μF	
C587	10μF	
C588	0.68μF	

Transistors

Tr561	BC431	
Tr562	BU208	

Diodes

D561	1N4001	
D562	1N4001	
D564	BCY85 C33	
D565	1N4148	
D566	BY204/10	
D571	BY201/3	
D572	BY201/3	
D573	BY201/3	
D580	BY201/3	
D581	BY211	
D582	SKE/462 04	

CORRECTION I AND II

Resistors

R831	250Ω*	
R836	15Ω	
R837	15Ω	
R838	2.2Ω	
R839	15Ω	
R840	100Ω	
R841	82Ω	
R842	60Ω*	

Capacitors

C827	1500μF
C837	0.47μF
C838	0.68μF
C839	0.47μF

NB. R831 is 60Ω. C839 is 0.68μF on Correction II module.

Diodes

D831	BY201/2
D832	BY201/2

SYNCHRONISM

Resistors

R531	1.5kΩ	z1
R533	1.5MΩ	z1
R534	6.8kΩ	z1
R535	3.3kΩ	z2
R536	2.7kΩ	z1
R537	2.7kΩ	z1
R538	150Ω	y1
R539	2.2kΩ	y1
R540	10.5kΩ	z2
R541	10kΩ	y2
R542	10kΩ	z2
R543	140kΩ	z2
R544	10kΩ	z2
R545	220kΩ	z2
R546	22kΩ	z2
R547	820Ω	y2
R548	91Ω	z2
R549	820Ω	z1
R551	220Ω	z1
R552	560Ω	z1
R554	10kΩ	y1
R556	180kΩ	y1

Capacitors

C531	68nF	z1
C532	2200uF	y2
C534	0.1uF	y1
C535	2.2uF	y1
C536	0.1uF	y2
C537	22uF	y1
C538	1uF	z2
C539	10nF	z2
C540	22nF	z2
C542	2.2nF	y2

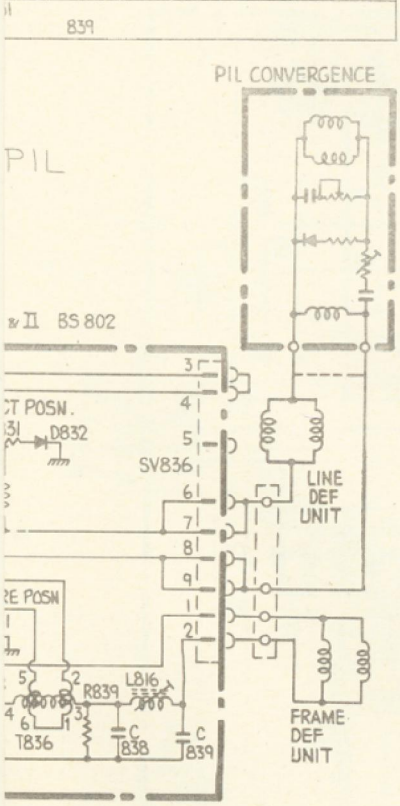

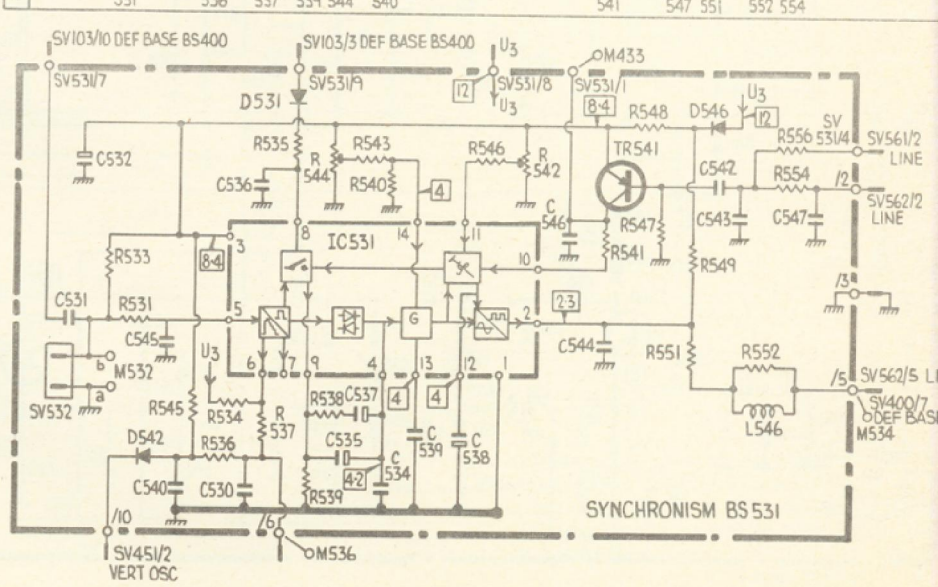

Synchronism

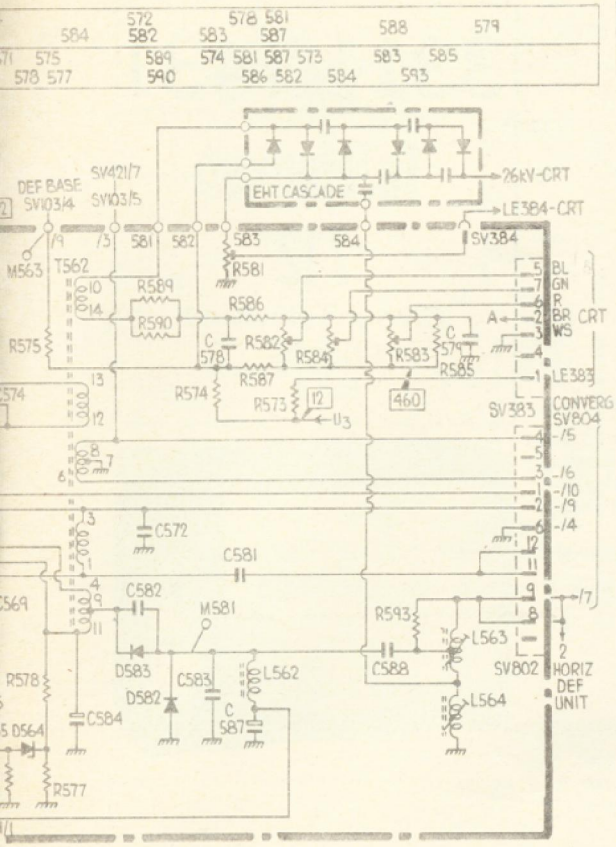

Line module (20AX)

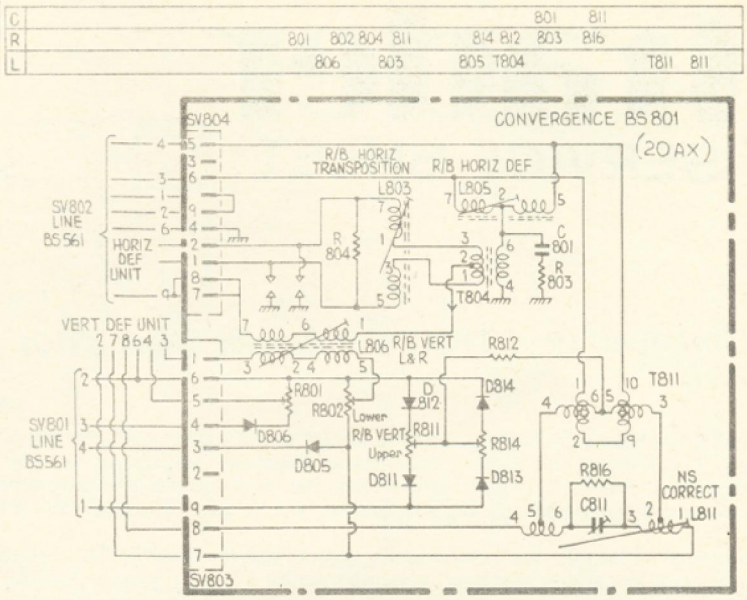

Convergence (20AX)

Capacitors

C501	68nF	w1
C502	0.56μF	w1
C503	4.7μF	w1
C504	5.6nF	w1
C505	68nF	w1
C507	10μF	x1
C508	0.47μF	x1
C509	0.22μF	w1

Transistors

Tr501	BC237B	
Tr503	BC237B	w1
Tr504	BC307	x1
Tr506	BD175	x1

Diodes

D501	1N4148	w1

CONVERGENCE (20AX)

Resistors

R801	3.3Ω	*d1
R802	3.3Ω	*d1
R803	3.3Ω	c1
R804	330Ω	c2
R811	100Ω	*d2
R812	27Ω	d2
R814	100Ω	*d2
R816	680Ω	d2

*variable

Capacitors

C801	1μF	c1
C811	680nD	d2

Diodes

D805	1N4001	d1
D806	1N4001	d1
D811	1N4148	d2
D812	1N4148	d2
D813	1N4148	d2
D814	1N4148	d2

C543	10nF	y1
G544	1nF	z1
C545	68pF	y1
C546	120pF	y2
C547	4.7nF	y1

Transistor

Tr541	BC308	y2

Integrated circuit

IC531	TBA920/2X	y2

Diodes

D531	1N4148	z2
D542	1N4148	z1
D546	1N4148	z1

EAST-WEST PINCUSHION

Resistors

R501	5kΩ	*x1
R502	33kΩ	w1
R503	56kΩ	w1
R504	3.3kΩ	w1
R505	27kΩ	w1
R506	22kΩ	x1
R508	10kΩ	w1
R509	100kΩ	w1
R513	330Ω	w1
R516	2.2kΩ	x1
R517	5kΩ	*x1
R518	25kΩ	*x1
R519	12kΩ	x1
R521	3.3kΩ	w1
R522	3.3kΩ	w1
R523	100Ω	x1

*variable

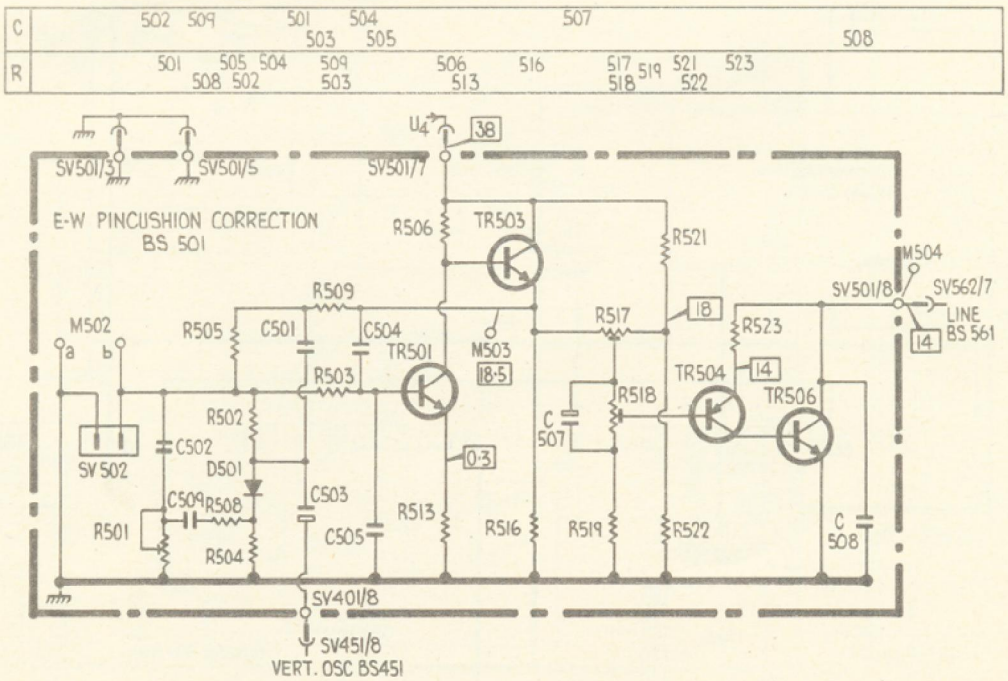

Printed in Great Britain by QB Ltd., Sheepen Place, Colchester, Essex CO3 3LJ. Telephone 77881 (10 lines), and Published by I.P.C. Electrical-Electronic Dorset House, Stamford Street, London SE1 9LU.