Servicing Saba Colour Receivers

Models T6715, T6716, T6735, S6715, S6716 and S6735

Part 1

P. C. Murchison

ONE of the most commonly encountered imported German television chassis is the first fully transistorised Saba one. It's used in several models, all variations on the same basic design which features a 110° cathode-ray tube and a thyristor line output stage. The reliability of these receivers is fairly good, but perhaps this is just as well since the chassis is not made up of separate plug-in modules, consisting instead of two main chassis units, one for the timebase circuits and the other for the signal and decoder circuits. Thus any field service problems have to be sorted out on site.

This is not quite as bad as it may seem since most of the integrated circuits, the decoder reference oscillator unit, the sound output panel, the line oscillator and the tuner unit are all unpluggable. This considerably eases servicing, since i.c.s can be quickly and easily substituted and a whole range of faults eliminated. The i.c.s used in the decoder and signal circuits are from the familiar TBA range, the decoder using four i.c.s (TBA510, TBA520, TBA530 and TBA540) whilst the luminance i.c. is a TBA500 and the intercarrier sound i.c. a TBA120.

Although the cabinet styles vary, there are two basic versions of the chassis, the simplest being fitted to Models T6715, T6716 and T6735. These have eight touch buttons for changing channels, and ordinary slider controls for regulating volume, brilliance and colour. The more complex Models S6715, S6716 and S6735 are ultrasonically controlled, with the colour, brilliance, volume, on/off and channel change functions all controlled via an ultrasonic link. The operation of the touch buttons on the T models is very similar to those on the Telefunken 711 chassis, using an SAS560 and an SAS570 i.c. Since this type of circuit was adequately described in the Telefunken article (see *Television* August 1976) it's not proposed to go into details of this part of the set in the present series.

The convergence unit is easily accessible from the front of the set. Remove the loudspeaker grille to reveal the static and the dynamic convergence controls. These are clearly labelled for adjustment in numerical order. The service switch and the first anode controls for grey-scale adjustment are also situated on this panel. Thus the complete setting up proceedure can be carried out without having to remove the back cover – and without having to wrestle with static convergence magnets on the tube neck whilst trying to look at the screen, static convergence being entirely electrical.

Two red plastic pegs are supplied with the set and should be found sitting in two slots in the back, just above the bump covering the c.r.t. projection. These pegs, often missing, are used to remove the speaker grille when pushed into the slots in the top left- and right-hand corners. The grille then hinges down to reveal the convergence panel. The volume should be turned right down before doing this, because the loudspeaker will then be disconnected from the output stage and damage to the output transistors could possibly result.

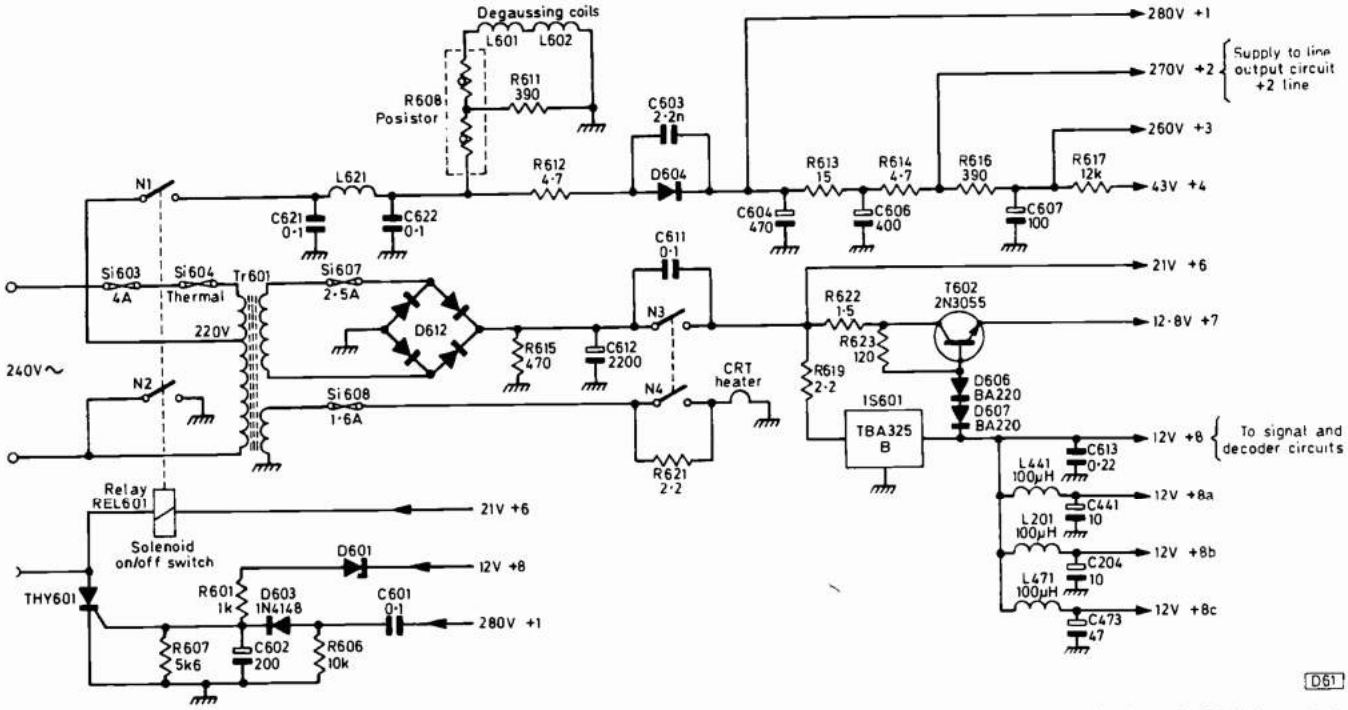

Fig. 1: Power supply circuit of the T6716 and associated models. Note that the c.r.t. heaters are energised via R621 the whole time the set is connected to a mains supply. N1/2/3/4 are the on-off switch contacts and in addition to normal operation will be switched off electrically via relay Rel601 in the event of an overload.

Having taken a brief look at the general nature of the receiver, we will now move on to examine it in more detail, starting with the power supply unit.

Power Supply Section

The power supply is much simplified in receivers employing a thyristor line output circuit since it's not necessary for the main h.t. line to be stabilised, stabilisation taking place in the thyristor line output stage itself. There are still some interesting points to be considered however. Fig. 1 shows the power supply circuit of the non-ultrasonic Models T6715 and T6716, along with the overload protection circuit which is centred around thyristor Thy601. This causes the mains switch to disconnect the supply rails should an overload occur.

Starting at the input end, the mains transformer primary is connected directly to the supply via fuses Si603 (4A) and a thermal fuse Si604 which is buried in a small tube within the mains transformer itself. This thermal fuse is a constant source of trouble, having a habit of blowing for no apparent reason. If a replacement is fitted it may last for several months or it may blow within a few weeks of replacement, so it would seem that these fuses are a weak link in the mains input circuit. The supplies and transformer are adequately protected with conventional fuses and there is the added bonus of the protection circuit: the author recommends shorting out this thermal fuse with a wire link to prevent further wasted time.

Instant-on

The mains transformer is permanently energised as long as the set is connected to the mains supply, the reason for this being to provide a constant voltage to the cathode-ray tube heater so that an instant picture and sound are obtained when the receiver is first switched on. The c.r.t. heater voltage is only 80% of normal under the "standby" condition, the 2·2Ω resistor R621 then being in circuit to reduce the heater voltage. When the mains switch is depressed, a pair of contacts (N4) on the switch short-circuits R621 and the c.r.t. heater then receives it's full voltage (6·3V). At the same time contacts N2 make the chassis connection, N3 connect the l.t. rectifier to the stabilising circuits and N1 connect the mains supply to the h.t. power supply circuits and the degaussing circuit.

Overload Protection

The mains switch is an unusual component in so much as it's normally operated manually but can also be turned off electrically by means of a magnetic coil (Rel601) which releases a latch at the rear of the switch, causing it to fly out, opening the contacts, accompanied by a loud click. This coil is connected to the protection circuit, which energises the coil should there be an overload on the 12V line or the h.t. supply – the supplies to the integrated circuits and the line timebase.

The anode of thyristor Thy601 is connected to the switch coil Rel601, so that when the thyristor is triggered the coil will be connected to chassis and current will flow through it, energising the coil. The control voltage for the thyristor comes from either the 12V or 280V line.

The ripple voltage on the 280V h.t. line is normally 2·5V peak-to-peak. This is supplied to diode D603 via the 0·1μF capacitor C601. Thus D603 rectifies the ripple voltage and charges C602 to around 0·35V, which is not quite large enough to trigger the gate of the thyristor. Should the h.t. load current suddenly increase, a much bigger ripple voltage will appear at capacitor C601. This is rectified and triggers the gate of the thyristor which completes the circuit to the switch off coil.

Table 1: Power Supply Lines and Destinations.

Line	*Voltage*	*Circuits supplied*
AC1	200V a.c.	Bias for telecommander receiver capacitive microphone.
AC3	14V a.c.	IC951; motor-operated mains on/off switch; electronic channel selection.
AC4	35V a.c.	Control motors for brightness, saturation and volume.
+1	280V	Protection circuit.
+2	270V	Thyristor line output stage; illuminated figures; channel indicators.
+3	260V	TBA530 and RGB output stages.
+4	33V	Tuner tuning voltage.
+5	10V	Channel selector board.
+6	21V	Audio circuits.
+7	12·8V	TBA920; line drive pulse shaping transistors T671/2; T674 (E/W correction); convergence circuits.
+8	12V	Vision and sound i.f. circuits; TBA500, TBA510 and TBA520.
+8a	12V	TBA510 and TBA540.
+8b	12V	Tuner; T1062/3/4 (switching transistors for band changing).
+8c	12V	TBA530.

The +8 l.t. rail (12V) is also protected. The voltage is applied to the 15V zener diode D601 and should it exceed 16V the zener diode threshold potential will be reached and a potential of about 0·6V will appear across R607, causing the thyristor to trigger and the set once again to switch off.

Spurious Triggering

There have been problems with the set switching off for no apparent reason. This can often be traced to the voltage at the thyristor gate being slightly higher than 0·35V. The remedy here is to lower the trigger sensitivity by reducing the value of R607 to 4·7kΩ: at the same time the gate potential is slightly reduced. Another cause of spurious triggering is an unearthed line oscillator can: the remedy here is to solder an earth lead from a chassis connection on to the can. Later production models are fitted with this earth link.

The +8 supply will increase should the 12·8V series regulator transistor T602 go short-circuit collector-to-base, or alternatively should the stabiliser i.c. IS601 become short-circuit: in either case the 21V from D612 will be applied to D601 and the circuit will trigger. A short-circuit on the 12V line can cause a voltage surge and hence triggering, though rather surprisingly the circuit will trigger if the +8 supply is open-circuit with no current flowing. In this case the voltage on the 12V line increases to 21V, current flowing through R623 and the two BA220 diodes D606/7, once again causing the cut-out to trigger.

LT Supplies

Having mentioned the various ways in which the 12V +8 supply can cause triggering, we must give some attention to the 12V supply itself, especially as the stabilising i.c. is "short-proof", a point which can be misleading. If the i.c.'s output current exceeds 600mA it will shut down and give just a few volts output, a fault condition which is also given by a faulty i.c. without the current being excessive. In order

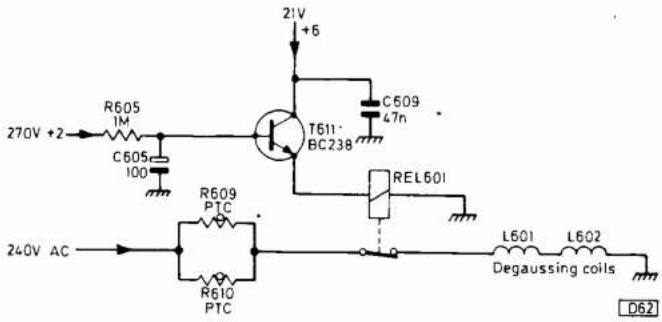

Fig. 2: Alternative degaussing circuit used in some versions of these sets. The degaussing cycle is determined by the time-constant of C605 and R605.

to decide whether the i.c. is faulty or whether to investigate the external circuitry, disconnect the outgoing supply rail and substitute a load resistor of around 40Ω. With this load, the current drawn should be around 300mA and a normal 12V should once again be present at the output of the i.c., proving that all is well and that the external circuitry is drawing in excess of 600mA. It's worth noting that the 12·8V +7 supply will be lost if the 12V line fails, because this provides the base reference voltage via the two diodes D606 and D607.

The only other fault prone component in this section of the power unit is the l.t. rectifier D612 which often fails, causing the fuse Si607 to blow as it usually goes short-circuit between one leg of the a.c. input and the negative output lead.

HT Supplies

The h.t. side consists of a conventional half-wave rectified supply. Should the 4A fuse blow, the components to suspect are C621 and C622, the 0·1μF capacitors in the mains filter circuit. They often go short-circuit. Failing this the mains rectifier D604 may be short-circuit, along with R612 open-circuit.

The +2 line (270V) is the supply to the thyristor line output stage. Should a thyristor or diode in this circuit fail, the power supply line will be overloaded and the trigger will cut the set off. Unfortunately the trigger is often not quite fast enough in switching the set off, the result being a shattered thermal resistor R613 and sometimes an open-circuit 4·7Ω resistor R614. It's good policy therefore to check the thyristor line output stage before switching the set on after replacing these components!

Degaussing Circuit

The degaussing circuit is conventional, the automatic degaussing being controlled by the double posistor R608. Some receivers employ a different type of degaussing circuit however, as shown in Fig. 2. Here the degaussing coils are completely disconnected from the a.c. supply after a fixed time of approximately eight seconds. Initially maximum current flows through the degaussing coils via the cold posistors R609/R610, the magnetic field produced quickly dying away as the posistors get hot. After eight seconds (the time-constant of R605 and C605) C605 has charged sufficiently to allow T611 to conduct. Relay Rel601 then operates to disconnect the degaussing circuit.

Remote Control Versions

The ultrasonic version of the receiver employs a slightly more complicated power supply circuit, as shown in Fig. 3.

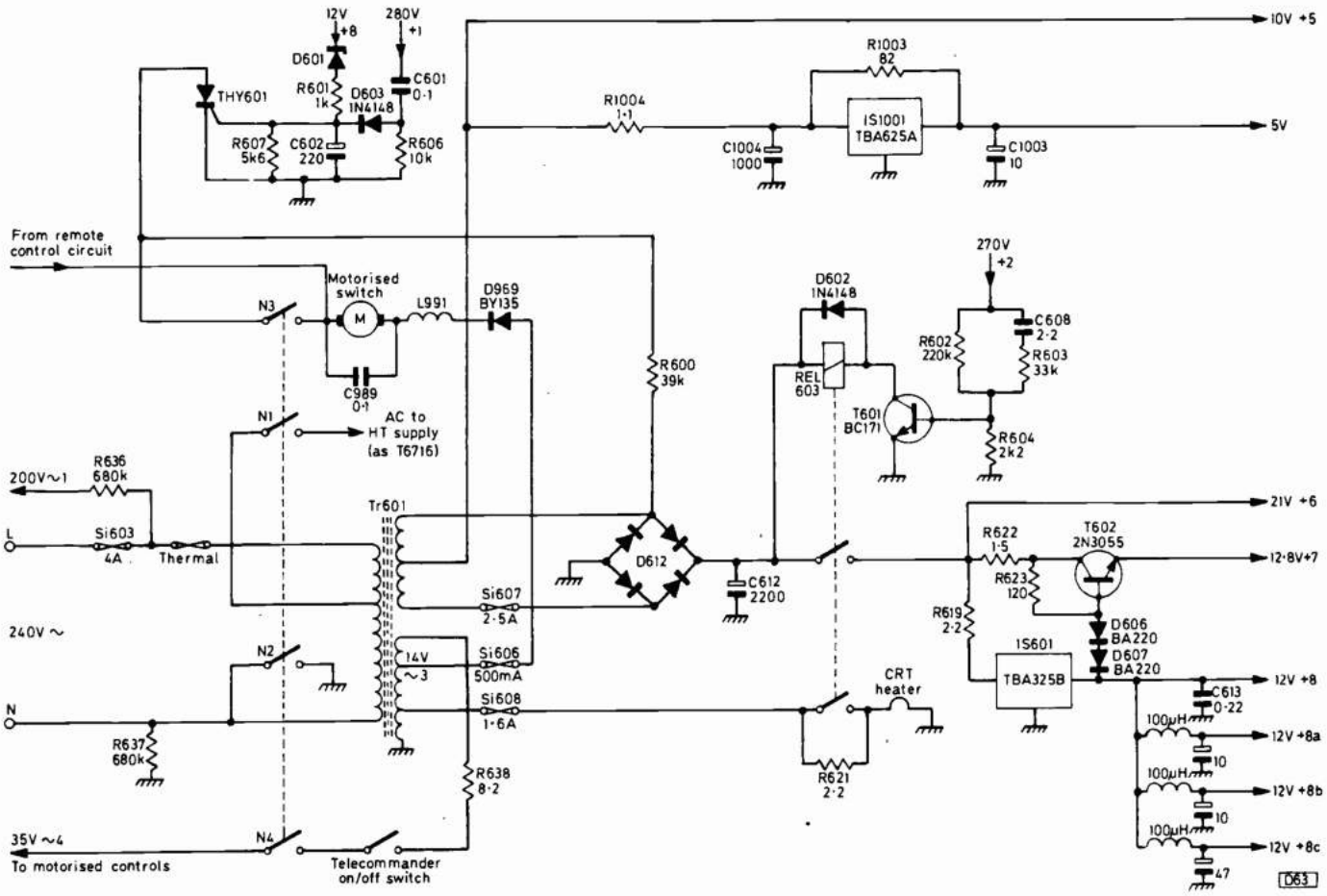

Fig. 3: Power supply changes in ultrasonically controlled versions. In these sets the on/off switch is motor driven and there are extra supply rails for the additional circuitry involved.

It employs motorised colour, volume, brilliance and on/off controls, along with a system of electronic station selection. These extra complications are incorporated so that the set can be operated remotely via the ultrasonic transmitter – details of these circuits will be covered in Part 3 of the series. Several extra power lines are required for these systems, and a mains transformer with extra tappings is used to provide the 35V and 14V a.c. supply lines for the motors. The feed to D612 is taken from a separate winding, and a centre tap is added to this winding to supply 10V to IC1001, the 5V stabilisation i.c. which supplies the i.c.s used in the electronic station selector circuit.

The protection circuit is combined with the motorised on/off switch so that should an overload occur the motor starts up and switches the mains supply off by breaking contacts N1 to N4, at the same time breaking its own supply. The motorised switch can be switched on either manually or via the ultrasonic link, so as to return power to the set. The c.r.t. heaters' standby switch and the l.t. switch are controlled by relay Rel603 which comes into operation when the 270V supply is present, this being established when the mains switch contacts N1 are made. R602 supplies the base of T601 with voltage. In consequence T601 turns hard on and the relay closes its contacts. Rapid switchover is ensured by the 2·2μF capacitor C608.

Supply Line Destinations

One of the main difficulties when servicing the power supply is in trying to find out exactly which sections of the receiver each line supplies, the circuit diagram having many arrows pointing in many directions, all labelled with various supply numbers! The various supply lines and their destinations are listed in Table 1.

Servicing Saba Colour Receivers

Models 6715, 6716, 6735 and 6745 (Chassis H)

Part 2

P. C. Murchison

HAVING looked last month at the power supply section of the receiver and the common faults there we will move on to the next most likely trouble spot, the thyristor line output stage. The circuit is shown in Fig. 4.

Line Output Stage Operation

First a word about its operation. Four active devices are used to provide the scan and flyback, thyristors Thy671 and Thy672 and their parallel diodes D673 and D676. D676 is a conventional efficiency diode providing the first part of the forward scan, Thy672 acting as a switch to provide the second part of the forward scan. It's switched on roughly a third of the way through the forward scan by the waveform fed to its gate from tag 4 on transductor Tr672. Easy part over. The problem is how to switch Thy672 off to provide the flyback, since this can't be done by feeding a control waveform to its gate (once a thyristor is switched on at its gate, it remains conductive until the current through it falls below the hold-on value). This is the purpose of the flyback thyristor Thy671, whose gate is controlled by the output from the line oscillator (via a two-transistor buffer circuit).

Thy671 is switched on just before the end of the forward scan. Because the components in its anode circuit – Tr672 winding 2-7 and the tuning capacitors C681/C677/C678 – form a tuned circuit, there is a rapid build up of current in the form of a sinewave. This current flows through Thy672 in the opposite direction to the scan current, and when it exceeds the scan current Thy672 switches off. Thereafter Thy671 and D673 conduct alternately to complete the current path during the flyback.

Transductor TD673 across the input coil (Tr672 winding 3-5) provides width stabilisation: it's driven by T673 which samples the h.t. voltage (via R689/P672) and the waveform at tag 13 of the line output transformer Tr671.

For further information on the operation of thyristor line output stages, see the June 1976 issue of *Television*.

Flyback Switch Failure

Perhaps the most common failure is when either the thyristor Thy671 or diode D673 in the flyback part of the circuit goes short-circuit. The electronic protection circuit then triggers, causing the motorised mains switch to shut off the power. Any attempt to reset the mains switch under these conditions simply causes the trigger circuit immediately to throw the mains switch out again, so it's pretty obvious that there is something drastically wrong with the set. A quick check with a multimeter on the ohms range will reveal a short-circuit between chassis and the 270V line. Thyristor Thy671 is number one suspect, with an anode-to-cathode short-circuit, though the culprit is sometimes a short-circuit diode D673.

When replacing a short-circuit thyristor it's good policy to check D673 because if this diode is open-circuit it will overload the replacement thyristor, causing it to break down. The difficult task of replacement will then have to be repeated.

Both thyristors are mounted on a plate forming part of the main chassis. They are sandwiched between a heatsink, a mica insulating washer and a moulded plastic insulator, all these pieces being held together by two nuts and bolts which are surrounded by many components. Replacement is far from easy!

The mica washer is very thin, sometimes breaking down where there is a weak spot. This results in a short-circuit between the chassis of the set and the anode of the thyristor. The effect is the same as a short-circuit thyristor, the trigger circuit switching off the power.

The thyristor can be overloaded, with consequent damage, should C676 (3·3μF) or R684 (150Ω) become disconnected or open-circuit, this fault resulting in the waveform at test point V4 becoming distorted and suppressed in amplitude. An oscilloscope is a very useful tool when trouble shooting in the line output stage, often saving much time and trouble when trying to locate the exact nature of a fault such as failure of C676 or R684. This fault can otherwise be very expensive, causing continual failure of thyristors.

Capacitor Troubles

Although capacitor troubles are less common it's worth noting some failures that have been experienced and their effects.

C677, C678 and C681 are connected in a T network to form the tuning capacitance. Failure of any of these components can cause a variety of effects. Should C678 go short-circuit the result is excessive picture width with R692 (270Ω) overheating, whilst a short-circuit C681 will cause the beam current limiter to come into operation with a resulting blank raster and no video information present.

The scan-correction capacitor C686, a large 0·68μF paper component, tends to fail rather violently, issuing forth clouds of smoke whilst the metal casing of the component bulges almost to bursting point. At the same time there is complete loss of e.h.t., with the electronic trigger circuit occasionally switching the set off. Should there be no warning smoke, a check with the oscilloscope will reveal that the waveform at test point T6 is incorrect and increased in amplitude to around 530V.

The 12μF capacitor C691 occasionally goes short-circuit, with a resulting loss of e.h.t. The waveform amplitude at test point T4 is then reduced to a mere 200V. Should the capacitor go open-circuit however the effect is unmistakable: a 2kHz whistle issuing from the line output stage, with the waveform at T4 again being affected.

Operation of the Stabilisation Circuit

The stabilisation circuit centred around T673 and D678

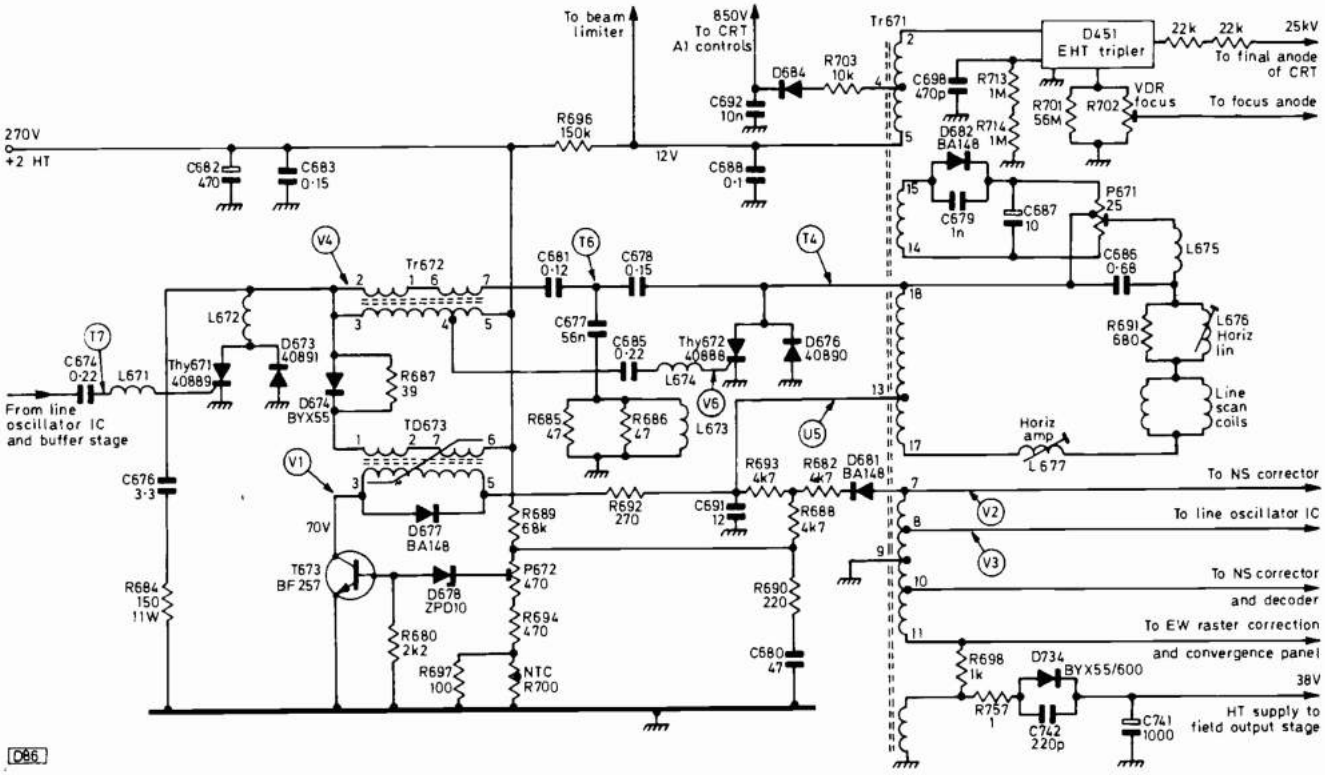

Fig. 4: Circuit diagram of the thyristor line output stage.

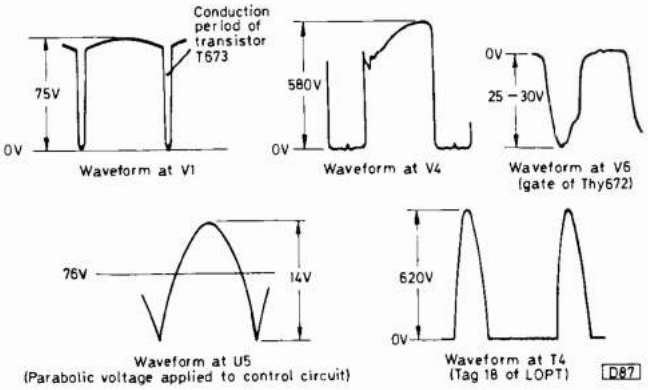

Fig. 5: Line output stage waveforms.

is rather interesting in its operation, so we'll take a more detailed look at it.

The sawtooth current flowing through the line output transformer produces a parabolic voltage (waveform U5) at the upper end of C691. This parabolic voltage sits on a d.c. level of about 76V, the d.c. being the mean value of the line pulses at point 18, the top end of the line output transformer (see waveform T4). A portion of this signal appears at the slider of P672. When the top of the parabola exceeds about 10V in amplitude zener diode D678 conducts, passing the parabolic voltage on to the transistor's base. It can be seen then that the transistor conducts only briefly. The waveform thus produced at the collector of transistor T673 shows a voltage collapse during the conduction period of the transistor, this conduction period being variable depending upon the amplitude of the parabola. Two factors determine the amplitude of the parabola.

First, the amplitude of the line pulse at point 18 varies with beam current, so the d.c. potential upon which the parabolic voltage sits varies in value. It's raised or lowered above or below the conduction potential of the zener diode for different periods of time therefore depending on the beam current. In addition, the peak-to-peak amplitude of the parabola will fluctuate in sympathy with variations in the amplitude of the sawtooth line waveform. In either case the transistor T673 will draw more or less collector current, depending upon the amplitude or position of the line parabolic voltage.

The transistor drives the control winding (3-5) of the stabilising transductor TD673, whose load winding (1-6) is connected in parallel with the line output stage h.t. input winding on Tr672 (tags 3-5) via diode D674 and R687. Thus the inductance of the charging circuit (Tr672 and the tuning capacitors) varies in sympathy with the length of conduction of T673 and stabilisation is in this way effected.

The control exercised by the circuit as described so far is insufficient to compensate for variations in the h.t. and operating voltages, so in addition the h.t. voltage is applied to the zener diode via R689 (68kΩ).

Picture width is adjusted by means of the preset potentiometer P672 which alters the amplitude of the control signal.

Diode D677 provides damping in order to protect the collector of T673 against the positive voltage swing that would otherwise occur when it switches off. Diode D674 also provides a damping action.

Stabilisation Circuit Faults

Having examined the control circuit we'll now look at its failings. The transistor T673 and zener diode D678 often fail, the result being excessive over or under scan. The zener diode occasionally goes short-circuit, so that there is a control voltage permanently at the base of T673. This turns the transistor hard on, the result being a very small picture (about six inches square). A similar thing happens when T673 goes emitter-collector short-circuit, but when the transistor goes open-circuit the result is an excessively wide

picture. It is recommended that the zener diode and transistor are replaced together should a fault occur in either of them.

Scan Switch Failure

We saw earlier how failure of the flyback switch thyristor Thy671 or diode D673 could result in the set switching itself off. Failure of the scan thyristor Thy672 or diode D676 does not have quite such a drastic effect on the receiver, but when either goes short-circuit the outcome is loss of e.h.t. and sound, though sometimes short-wave radio stations can be heard from the speaker! This is because the i.f. strip is completely shut down when the line frequency gating pulses are missing from the a.g.c. circuit, though some radio signals can break through to the sound channel.

D676 has been known to go open-circuit. This results in a very small picture and usually damages the thyristor so that both components have to be replaced. When this happens the waveform at test point T4 is distorted, with a "ringing" effect during the line scan period.

Tripler Failure

The tripler all too frequently fails, and when it does it loads the line output stage to such an extent that line pulses to the gated a.g.c. circuit are again lost, with similar results to those given by scan diode/thyristor failure. Disconnecting the tripler from the line output transformer will in this case remove the load and restore normal sound. Fitting a replacement tripler will then restore the e.h.t. A clue to tripler failure is to remove the c.r.t. anode cap and examine the two resistors enclosed within. If these are badly burnt (they sometimes melt the anode cap!) the tripler can be thrown away!

Focus VDR

Not far from the tripler and connected to it is the focus v.d.r. R702. This is of a notorious type used for many years in German TV receivers. After several years' operation the control requires frequent resetting, possibly every two or three months. Investigation will reveal that the control is in a very fragile state, crumbling to a powder at the slightest touch. Replacements cost several pounds each, but unfortunately this provides the only lasting cure to the trouble.

Line Whistle

Thyristor timebases are extremely noisy in operation and whilst some increase in line whistle can be accepted there comes a point where it becomes really intolerable! The only way in which to attempt to cure this trouble is to remove the line output transformer from the printed circuit board and try to tighten the bolts holding the core together. These bolts are accessible only when the transformer is removed, so it's fortunate that the transformer is unpluggable after first unsoldering the two clips holding it into the printed circuit. Sadly, if this tightening doesn't cure the whistle the only answer is to replace the transformer and hope that the new one proves less noisy.

Field Collapse

It's worth mentioning that the 38V supply for the field output stage is derived from the line output transformer. The rectifier is D734 and its reservoir capacitor C741. D734 (BYX55) occasionally fails, its surge limiting resistor R757 (1Ω) burning out along with the expected loss of field scan. Thus both these components have to be replaced. The field timebase itself is reliable, the only trouble we've had being occasional failure of the field output transistors T276 and T278 (BD697 and BD698).

Next Month

The next instalment will take a look at the front-end tuning and the ultrasonic control system used in the S6716, S6735 and associated models. The operation of the circuits is interesting and they are not trouble free. . . .

ON-SCREEN CLOCK
COMPONENTS LIST

Resistors:

R1	10k	R9	100k	R17	AOT
R2	10k	R10	100k	R18	AOT
R3	22k	R11	100k	R19	10k
R4	1k	R12	AOT	R20	22k
R5	100k	R13	AOT	R21	2k2
R6	100k	R14	AOT	R22	22k
R7	100k	R15	10k	R23	56k
R8	10k	R16	AOT		

RV1–RV6 10k subminiature linear horizontal presets.

Capacitors:

C1	33pF ceramic plate	C6	6n8 Polyester
C2	330pF ceramic plate	C7	100n ceramic plate
C3	100n ceramic plate	C8	2200μF 25v electrolytic
C4	1μF 35v tantalum bead	C9	470n polyester
C5	100μF 25v electrolytic		

Plus 7 off 10n ceramic plate for decoupling i.c.s.

Semiconductors:
Important: IC3, IC4, IC5, IC6, IC7, must be RCA B series CMOS. This should not be confused with A series or Jedec B series which are 15 volt rated. The RCA B series can be identified by the suffix BE or UBE.

IC1	AY-5-1203A	IC7	4016 BE or UBE
IC2	AY-5-8320	IC8	7812
IC3	4011 BE or UBE	TR1, TR2, TR4	2N3704
IC4	4049 BE or UBE	TR3	2N3702
IC5	4011 BE or UBE	D1–D5	1N4148
IC6	4016 BE or UBE	Bridge rectifier:	BY164

Miscellaneous:
Mains transformer: 18v secondary @ 1A
P.c.b. reference No. DO45 from Readers' PCB Services Ltd.

The Television monochrome portable can now be seen working at Manor Supplies, 172 West End Lane, London NW6.

Servicing Saba Colour Receivers

Chassis H Telecommander System

Part 3 *P. C. Murchison*

THE S6735 and associated models can be operated with a hand-held remote control box which is powered by a 1·5V battery. This control box houses an ultrasonic oscillator and is capable of transmitting nine different frequencies for selecting the various control operations, enabling the receiver to be turned on or off, the channel to be changed, or the volume, brilliance or colour to be turned up or down. The signals are transmitted by a transducer mounted at the front of the control box. They are picked up by a similar transducer mounted at the front of the set, and are then fed to the various tuned circuits for activating the appropriate circuits within the receiver. Before moving on to these circuits however we will make a brief examination of the ultrasonic transmitter itself.

Ultrasonic Transmitter

Fig. 6 shows the internal circuit of the transmitter, which consists of a single transistor oscillator (T1, L1, C2, C3) working at a basic frequency of 44·75kHz, a bank of push buttons which select lower frequencies by switching additional capacitors in parallel with C3, and the transducer UW1. The choice of frequencies used is rather important, because interaction between the harmonics of the line timebase and those of the ultrasonic link could cause spurious operation of the remote control circuit. The frequencies used are chosen so that they lie between the first and second harmonics of the line oscillator (31·25kHz to 46·875kHz), the useful range being from 34 – 45kHz, allowing for the spread of line frequency when the oscillator is free running. The lowest frequency used is 34·25kHz, the highest 44·75kHz, with one exception of 28·25kHz used for channel selection.

When one of the push buttons is depressed to select an operation such as "increase brilllance", the additional parallel capacitor is switched in first to ensure start up at the correct frequency, followed by the connection of the positive terminal of the battery supplying the oscillator with voltage. The switch is of the sliding variety, and its contacts are staggered in order to achieve this "delay" effect.

In theory the oscillator will continue to oscillate even when the battery voltage has fallen to 0·8V, but in practice it has been found that even a slight fall off in battery performance will cause some variation in frequency. The result is interaction between controls. The purpose of the diode D3 in the base-emitter circuit of T1 is to keep the emitter-base voltage constant so as to stabilise the frequency when any button is pressed for a lengthy period of time. This will not compensate for a very low battery however, although it should theoretically improve the situation under low battery conditions.

The transducer UW1 is of the capacitance variety. This type of transducer has to be biased to avoid frequency doubling when the sinewave signal is applied. The bias voltage, of around 170V, is obtained from the voltage-doubling circuit D1, D2, C4, C5.

Fault Conditions

The first suspect should any fault occur is the battery. The transmitter seems to draw a fair amount of current from the battery: this, coupled with the fact that users often don't bother to fit a new one, often leads to a service call merely to replace a battery. The symptoms are mixed operations and lack of remote colour control, with the oscillator sometimes tending to stop working at the higher frequencies.

Sometimes however the oscillator fails completely, the result being no control operations working. The usual cause is failure of the transistor T1. To check the oscillator, connect an oscilloscope across the transducer UW1 and then press one of the selector buttons. A 180V peak-to-peak sinewave should be seen on the oscilloscope screen. Failure of the oscillator has also been caused by C3 breaking down, though this sometimes doesn't cause complete failure but a shift in frequency due to a change in capacitance value. The result will again be muddled operation of the selector buttons, coupled with general insensitivity of the remote control.

A common culprit in cases of insensitivity is the transducer (UW1). This can become so insensitive that the remote control has to be held about six inches from the front of the set before any results can be obtained. At the same time frequency shifts, and the operations once again tend to interact with each other. Replacing the transducer is the only way to prove whether it's faulty or not.

Insensitivity faults can be caused by a failure in the receiver, so it's as well to have a known good transmitter to hand to avoid being misled into looking for a non-existent transmitter fault! More will be said later about the receiver side.

When an ultrasonic transmitter comes in for repair it's as well to quiz the customer very carefully about the exact cause of its failure. We've had units with tea or soup spilt over them, and units that have been hurled to the ground cracking the printed circuit in a multitude of places. Soup in the transducer spells disaster, but the customer always seems amazed that the unit is ruined, expecting it to withstand all manner of domestic disasters.

Transmitter Alignment

Inevitably the temptation for field service engineers is too great: they can't resist having a twiddle of the oscillator coil L1 or the trimmer capacitor C2 when confronted with a transmitter malfunction. So the transmitter finds it way into the workshop for realignment. The only way to do this properly is to use a frequency counter. Connect the frequency counter between terminal A of the transmitter transducer and the positive pole of the 1·5V battery. Depress the volume negative push button and adjust the core of the oscillator coil L1 to give the correct frequency of 34·25kHz on the frequency counter. Having set the lower

frequency, the next thing to do is to bring in the highest frequency with the trimmer C2. Depress the colour positive button, and trim C2 for a frequency of 44·75kHz on the counter display. Having carried out this procedure the transmitter should be on frequency and all operations should function correctly.

Ultrasonic Receiver

Having had a look at the ultrasonic transmitter and its faults and setting up procedures, the time has come for us to move on to the more complex and interesting circuitry of the ultrasonic receiver and to find out how the individually transmitted frequencies control the brilliance, colour, volume, on/off and channel change circuits.

When an ultrasonic signal reaches the television receiver it's picked up by the electrostatic microphone UW951 (see Fig. 7) and is then fed into an operational amplifier i.c. (IS951) via the coupling capacitor C952. The microphone is biased by a 130V d.c. supply which is obtained from the 200V a.c. line. The rectifier is D953 and the smoothing filter C964, R962 and C951. The incoming signal is of extremely low amplitude, and to be of any use needs to be amplified about a million times. The operational amplifier consists of a three-stage amplifier with a gain of about 120dB. For its operation the i.c. requires a 13V stabilised power supply. This is obtained from the 14V a.c. supply which is rectified by D952 and smoothed by the large electrolytic capacitor C962 and then stabilised by means of the 13V zener diode D951. This 13V line can be switched on or off by means of switch S1, the remote control on/off switch provided on the front control panel of the set.

Because of its extremely high gain, the i.c. provides some limiting action. Thus the output signal applied to the primary of transformer U951 is approximately rectangular in shape. Connected across the secondary of this transformer – in parallel with it – are nine tuned circuits, one for each frequency and corresponding to an individual control function. Each tuned circuit is a very high Q series resonant arrangement, the general set up being shown in Fig. 8. Before taking a closer look at this however we'll mention one or two faults associated with the operational amplifier stage.

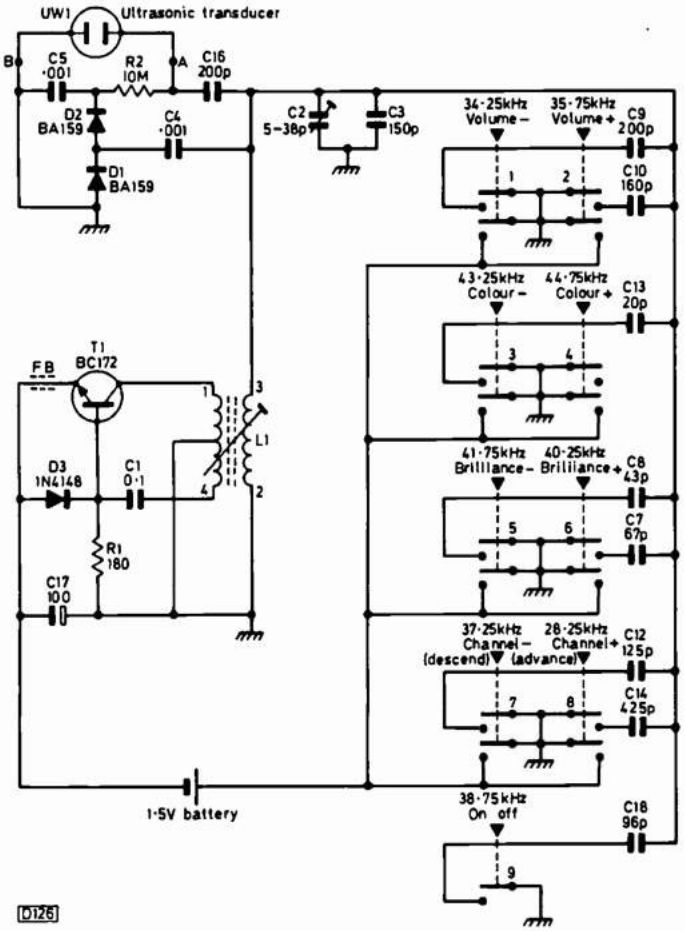

Fig. 6: Circuit of the ultrasonic transmitter unit.

Fig. 7 (right): The ultrasonic signal receiver circuit in the TV set.

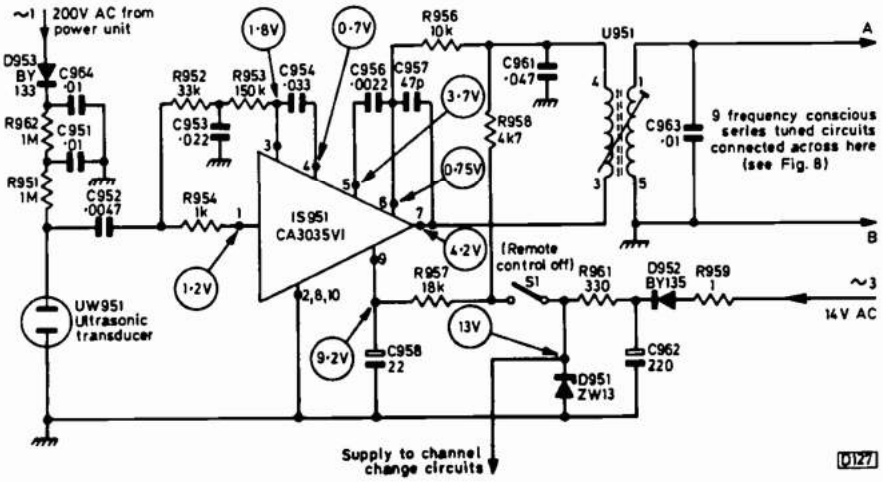

CORRECTION

We regret that C676 in the line output stage was shown incorrectly as 3·3μF in both the circuit (Fig. 4) and the text last month. Its correct value is 0·0033μF.

Front-end Faults

As with the transmitter, one of the most common troubles in lack of sensitivity. The ultrasonic transmitter may only just manage to work the set when held with its transducer against the receiver transducer.

The first thing to do in this instance is to check whether the 130V bias is present across the transducer UW951, because the two 1MΩ feed resistors R962 and R951 can go open-circuit to remove the bias. Similarly D953 can fail as can R636, the a.c. feed resistor in the power supply section dealt with in Part 1. If all is well here, check the transducer itself by substitution. The i.c. has proved to be reliable, and should be suspected only as a last resort after checking the transducer, the coupling capacitor C952 and the supplies to the i.c. and the transducer.

To check the operation of the i.c., hold the transmitting transducer against the receiving transducer and connect an oscilloscope between pin 6 of the i.c. and earth. If all is well, an output square wave of 1V peak-to-peak should appear at pin 6 when one of the remote control buttons is depressed. When the oscilloscope is connected across the transducer itself, a very noisy 0.2V peak-to-peak sinewave should be present. This provides a further check as to whether the transmitter is working correctly.

Remote Brilliance, Colour and Volume Control

So much for the front end. We'll now consider the tuned circuits mentioned earlier and see how the various controls are operated.

The brilliance, volume and colour controls all operate on the same principle, which rather surprisingly involves the use of motorised potentiometers. Each control can be manually operated from the front control panel of the receiver, or alternatively can be rotated electrically by means of two a.c. motors mounted upon the same shaft and coupled to the control through a reduction gear train. One a.c. motor is used for forward rotation of the control, the second motor being used for reverse control. If we take the colour control for example, pressing the "colour increase" transmitter button will cause the control to rotate in a clockwise direction, whilst the "colour decrease" button will cause the motor to rotate in the opposite direction.

Staying with the colour increase operation, when the frequency of 44.75 kHz is received the sinusoidal waveform is selected by the series tuned circuit C976 and L966, taken off by the secondary winding and fed via the sensitivity control P963 to the gate of thyristor Thy963. The thyristor conducts and connects the top and bottom junctions (X and Y) of the full-wave rectifier D963 together, therby opening a path so that the 35V a.c. supply can be applied to motor

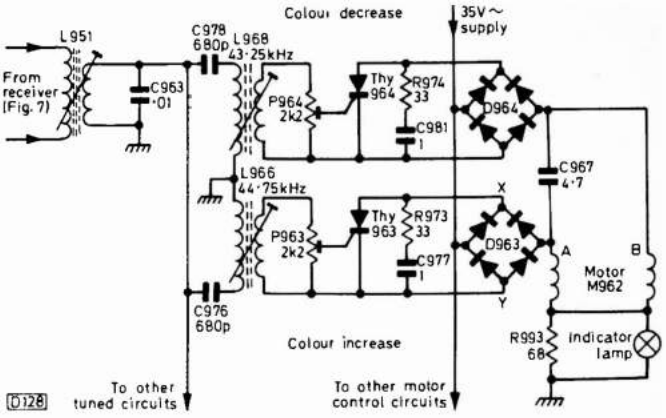

Fig. 8: The motor control system for colour change.

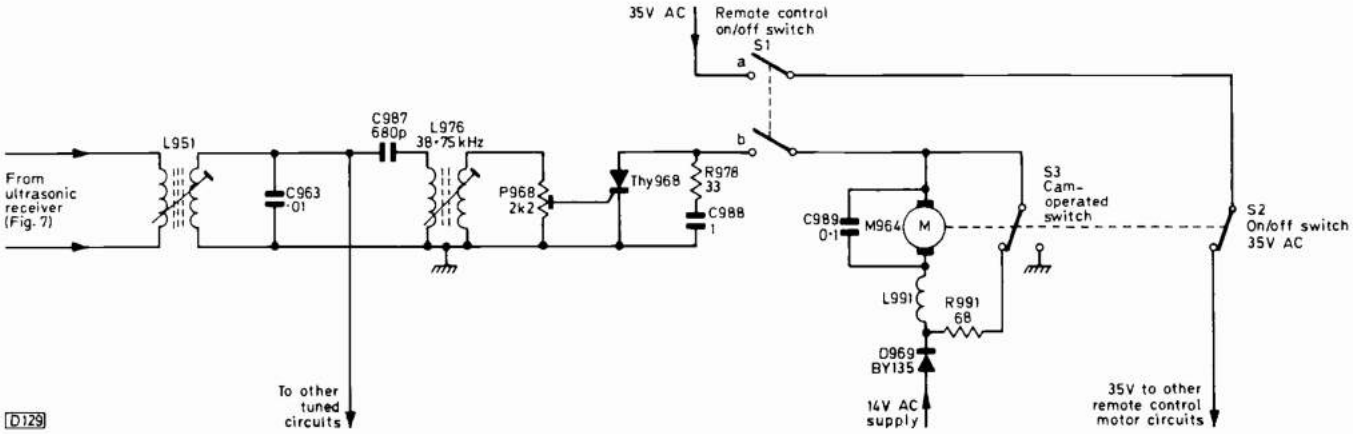

Fig. 9: The on/off control circuit.

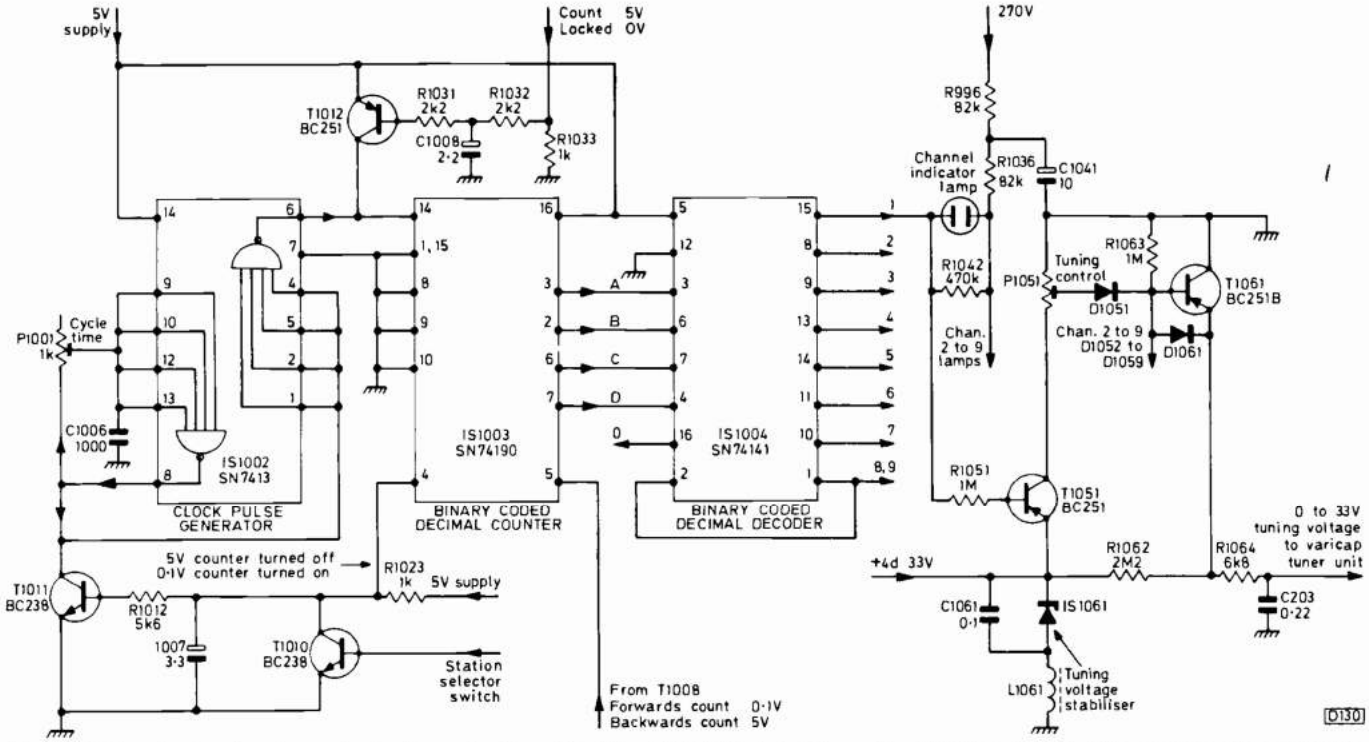

Fig. 10: The electronic channel selection circuitry. Pin 11 of IS1003 is fed from the 5V line via a 4·7kΩ resistor decoupled by a 4·7μF electrolytic capacitor (R1034, C1013, not shown).

M962. The motor is then energised and rotates the colour control in a clockwise direction. At the same time a voltage is developed across the 68Ω resistor R993 and the indicator lamp at the front of the set is illuminated to tell the user that the signal is being received and all is working correctly. Any spurious noise pulses picked up by the tuned circuit are suppressed by C977 and R973, thereby preventing the motor being pulsed.

The circuitry associated with the volume and brightness controls is the same as that for the colour control: for this reason Fig. 8 shows only the colour control increase and decrease functions.

On/off Control

In Part 1 we saw how the on/off switch is motorised so that should an overload occur the protection circuit energises the motor which then automatically shuts off the mains supply. When the receiver is being controlled remotely, this same motor is used to switch the receiver on or off, being in this instance energised from a different source. The circuitry is shown in Fig. 9.

To switch the receiver on the on/off button on the ultrasonic transmitter is pressed briefly so that a short burst of oscillation is received at the set. This is amplified and selected by the tuned circuit C987, L976, which is tuned to 38.75kHz. This causes thyristor Thy968 to fire, in the same way as previously, and one side of motor M964 is then connected to chassis via the thyristor. The motor is thus energised and starts to operate the on/off switch.

Connected to the shaft of the motor is a cam-operated switch. After the cam has rotated slightly the switch contacts make, thus connecting the motor directly to earth. The motor current now takes this path instead of flowing via the thyristor. When the mains switch reaches the on position, the cam switch breaks and the motor stops – providing the thyristor is not being fired. R991 is connected in parallel with the motor by a second contact on the cam-operated switch, the low-resistance load giving a braking effect so that the motor stops instantly. The cam-operated switch is now back in its original position. Further operation of the remote control will cause the motor to restart, and after further rotation the mains switch will be pulled back into the off position.

The 14V, 35V and 200V a.c. supply rails are all derived from the unswitched mains transformer and are consequently present for the whole time that the set is plugged in. This is necessary to allow the circuitry for switching the set on remotely to be continuously powered so that the set is always ready for action.

Channel Changing

The most complicated section of the receiver is the part concerned with channel changing. There are nine channel positions which can be selected in sequence upwards or downwards either via the remote control unit or from the front panel of the receiver where there are two buttons, one for upward selection and one for downward selection. The channels are numbered 1 to 9 and there is a series of nine cut-out numbers, each illuminated by a small neon lamp, which indicate which channel the set is switched to. Each time the upward button is depressed the channel advances by one position. On reaching number 9 it returns to number 1 again. The downward button allows channel selection in the reverse direction from 9 back to 1, the downward button moving the channel down one position each time it's pressed. In each channel position a tuning potentiometer is connected to the 33V tuning voltage supply, and a portion of this is fed to the varicap tuner unit in the normal way.

Before looking at station selection by means of the remote control we shall have to examine the electronics of the system. This involves some use of digital circuitry.

Fig. 10 shows in somewhat simplified and hopefully easier to understand form the circuit of the heart of the channel selection system. It's centred around the three integrated circuits IS1002, IS1003 and IS1004.

The first i.c. acts as a clock pulse generator and phase inverter/pulse shaper, the net result being a clock pulse output at pin 6. The mode of operation of this i.c. is a bit complicated, but briefly it revolves around two NAND Schmitt trigger circuits, the first one operating as the clock pulse generator. The output voltage at pin 8 is fed back via the cycle time control P1001 to the input of the gate. The output is also fed from pin 8 to the second trigger which shapes and inverts the pulse before it leaves the i.c. at pin 6.

The clock generator is normally stopped because pin 8 is shorted to earth by the bottomed transistor T1011. When the channel selector button is depressed however T1010 is turned on and the voltage at the base of T1011 falls to chassis potential. T1011 then switches off and the clock pulse generator starts to run. It continues to do so as long as the channel selector is depressed.

The clock pulses are fed into the second i.c. IS1003, the BCD counter. This consists of several bistable circuits but for simplicity is best regarded as a black box. The clock pulse input goes in at pin 14 of this i.c., which has four outputs at pins 3, 2, 6 and 7. These are coded A, B, C and D (see Fig. 10), the voltage levels at these pins depending on the number of clock pulses received at the input. The various states of the outputs are shown more clearly in the truth table below, where 0 is zero volts and 1 is 5V.

Clock pulses	Pin 7 (D)	Pin 6 (C)	Pin 2 (B)	Pin 3 (A)
0	0	0	0	0
1	0	0	0	1
2	0	0	1	0
3	0	0	1	1
4	0	1	0	0
5	0	1	0	1
6	0	1	1	0
7	0	1	1	1
8	1	0	0	0
9	1	0	0	1

The counter has to know whether the "ascend channel" or the "descend channel" button is being pressed, so an additional circuit (to be dealt with later) puts a high or low voltage level on pin 5 of the i.c., the high level telling the counter to count downwards whilst the low level tells it to count upwards.

The counter circuit is provided with two interlock circuits to ensure that operation is trouble free. The first interlock circuit consists of transistor T1012 whose collector is connected to the counter input. During the count period the transistor is cut off, with 5V applied to its base to bring its base to the same level as its emitter. This action clears the counter input. When counting ceases however the positive voltage is removed from the transistor's base and it conducts, short-circuiting the counter i.c.'s input. Included in this circuit is a delay network consisting of R1032 with C1008 to prevent any spurious pulses causing random channel changing.

The second interlock circuit is applied to pin 4 of the i.c. The counter will operate only when this pin is at a potential of 0·1V. This voltage drop at the start of the count

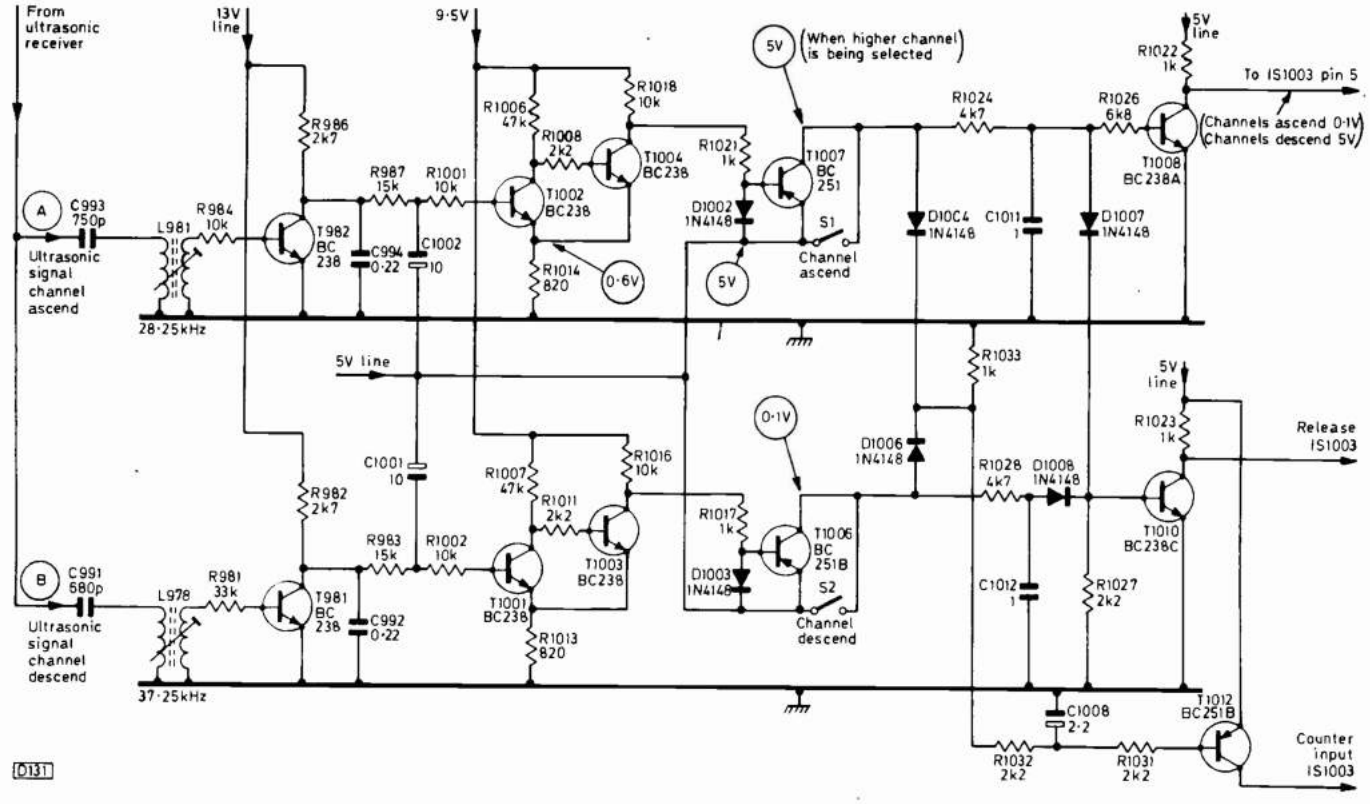

Fig. 11: The channel change circuit which drives the circuitry shown in Fig. 10.

is derived from transistor T1010 which as previously mentioned turns on hard when the station selector button is pressed.

The binary data from outputs ABCD of IS1003 is fed directly into IS1004 pins 3, 6, 7 and 4. This integrated circuit can be regarded as another "black box", whose function in life is to convert all incoming binary codes into the decimal system, giving ten outputs each of which is switched in turn to chassis potential (0 level) when the appropriate binary code is fed into its input.

Although there are ten outputs from the i.c. there are only nine channels to be selected. To dispense with the unwanted output, pins 1 and 2 are connected together. As a result, twice the time is required to change from channel 9 to 1. Output 0 is connected to the channel 1 circuitry so that the set will automatically switch to this channel when first switched on from cold. To make the binary to decimal decoding process a little easier to grasp, the truth table below sets out the states of the inputs and the resulting output channel selected.

	Input state			
Channel	D	C	B	A
1	0	0	0	0
2	0	0	0	1
3	0	0	1	0
4	0	0	1	1
5	0	1	0	0
6	0	1	0	1
7	0	1	1	0
8	0	1	1	1
9	1	0	0	0
9	1	0	0	1

As previously mentioned the switched output is at almost chassis potential, this being the condition when the output transistor within the i.c. is turned hard on. When the internal transistors are cut off however their collector-emitter voltages are limited to around 50V by internal zener diodes connected in parallel with them.

Channel Selector Circuit

Thus any one of the nine outputs of IS1004 is connected to chassis in ascending or descending order, so that the appropriate channel selection circuit is made to function. Consider the case of channel 1, which is selected when pin 15 of the i.c. goes to chassis potential. When this happens the transistors T1051 and T1061 switch states. Prior to this the voltage at pin 15 of the i.c. will be somewhere around 50V while the voltage at the other end of the neon indicator lamp will be around 60V. The neon will be extinguished therefore, and T1051 will be cut off since its base potential will be 17V higher than its emitter potential.

As soon as channel 1 is selected, pin 15 of the i.c. drops to zero volts, the neon lamp lights and at the same time T1051 is biased on since its base is now negative with respect to its emitter. The 33V tuning voltage, stabilised by IS1061, is thus applied to the tuning potentiometer P1051. T1061 conducts and connects the tuning voltage to the varicap tuner via D1051 and its base-emitter junction. There are eight similar circuits for channels 2 to 9. All function in the same way, each being connected to an output of IS1004.

Fault Conditions

Having looked at this rather complicated arrangement we'll take a short breather to consider fault conditions before going on to the final part of the channel selection circuit, involving the actual manual and ultrasonic switching of the counter and clock generator circuits.

The i.c.s and the station selector circuitry are housed on a small printed circuit panel which lives on the reverse side of the removable loudspeaker grill. As explained in Part 1, this grill can be removed to reveal the convergence panel,

but with the ultrasonic models it also incorporates the channel ascend/descend buttons along with the nine neon indicator lamps plus the additional unpluggable circuit board. Two of the i.c.s, IS1003 and IS1004, are unpluggable whilst for some curious reason IS1002 is soldered into the board. Perhaps the manufacturers were being optimistic about the reliability of this component: sadly, experience has shown that soldered in i.c.s always seem to fail much more frequently than the plug in variety, and care has to be taken not to ruin the very thin print when unsoldering these i.c.s.

Included on the channel selector printed circuit board is the 5V stabiliser i.c., IS1001, a TBA625A which was mentioned when we dealt with the power supply. This i.c. powers the three logic i.c.s IS1002-4, and often causes misleading effects when it fails. Measuring the 5V line will often reveal six or seven volts present and this upsets the operation of the logic i.c.s, causing erratic channel selection and random channel selection when for one push of the button the channel will often ascend several positions in one go. A change of TBA625 will correct the 5V line and all then reverts to normal. Another cause of random channel selection is failure of either IS1003 or IS1004, where presumably the correct binary code is not present at the output of IS1003, whilst IS1004 fails to receive binary information on all four of its inputs. These i.c.s are plug in ones and can be easily checked by substitution.

C1006, at the clock pulse generator, has been known to fail, usually intermittently. The result is again random channel selection.

Sometimes it's impossible to get any change of channel, the indicator lamp for one of the positions remaining stubbornly lit regardless of pushing the channel change "up or down" buttons. The answer is first to try IS1004 as it's unpluggable. If the circuit still refuses to function, the next suspect is the clock pulse generator IS1002 which has to be unsoldered from the board. On replacing IS1002 all should revert to normal.

Tuning drift seems to occur quite often and there are a number of components, apart from the tuner unit itself, which can cause this. The obvious one is the stabiliser i.c. IS1061 (ZTK33A) which is a notorious component used in many German receivers. Since these Saba sets do not incorporate any form of a.f.c. stability is essential, the slightest drift off frequency lowering the picture quality. A slight shift in tuning voltage can be caused by T1061 or C203, or sometimes a variation in the switching level within IS1004. One way to deal with a problem like this is to substitute components one at a time until the culprit comes to light. Alternatively suspect components can be sprayed with freezer – after the receiver has warmed up. When the faulty component is hit the tuning should revert to normal.

It has been known for one channel to jump suddenly off frequency, resetting the preset tuning control bringing the set back on to tune. Any one of the diodes D1051 to D1059 can cause this, the one to change depending upon which channel the receiver is set to.

Finally a puzzling fault, the channels continually changing upwards for no apparent reason. This can be traced to a simple fuse failure (Si606) in the power supply. The fuse feeds the "AC3" 14V a.c. line to the Schmitt triggers in the channel switching circuits. These circuits are next on the agenda.

Channel Switching

Fig. 11 shows the complete circuit for channel selection, either when pressing the channel ascend/descend buttons or when receiving an ultrasonic signal. This circuitry precedes the counter i.c. IS1003 and the clock pulse generator i.c. IS1002, and as well as releasing the counter it provides the voltage level which decides whether the count is upwards or downwards.

To simplify matters we'll start by considering what happens when a higher channel is selected via the remote control unit.

The tuned circuit L981, C993 is connected to the output of the ultrasonic receiver in the same way as with the other controls, and selects the channel ascend frequency of 28·25kHz. As a result T982 turns hard on, its collector voltage dropping suddenly from 12V to practically zero volts. T982 is connected to the Schmitt trigger T1002/T1004, and consequently the first transistor in the trigger circuit, previously conducting, switches off, its collector voltage rising to 9.5V. This causes the second trigger transistor to reverse its state, switching on. The base of the pnp transistor T1007 then goes negative with respect to its emitter, so this transistor also starts to conduct. Its collector voltage is now 5V and this is passed via R1024 and R1026 to the base of T1008, turning this transistor on so that its collector falls to 0·1V. This transistor determines the logic level for counting in the forward or backward direction: if its output, which feeds IS1003, is low the count is forwards, whilst if its output remains high the count is in the reverse direction.

The 5V at T1007 collector is also fed via D1004, R1032 and R1031 to the base of transistor T1012. This transistor feeds the counter input (pin 14) and is normally conducting, shorting out the input to the counter i.c. IS1003. When 5V arrives at its base the transistor cuts off and removes the short-circuit. The clock pulses are then free to pass into the counter from the clock pulse generator i.c.

The 5V also passes via R1024 and D1007 to T1010's base. This transistor then switches on, its collector potential falling to around 0·1V. As a result the counter and clock pulse generators are both released as previously described.

The operation when selecting a lower channel via the remote control unit is the same as before. This time T1006's collector voltage rises to 5V, switching T1012 off and T1010 on to allow counting to commence. T1008 has to remain cut off, D1004 and D1007 preventing the 5V arriving at T1008's base. Hence T1008's collector remains at 5V and this information at pin 5 of IS1003 ensures that the counter is programmed to count downwards.

For manual channel selection the push buttons S1 or S2 connect the 5V directly to T1007 or T1006 collector. T1008, T1010 and T1012 are then switched in the same way as with the remote control operation to allow IS1003 to commence counting.

Reliability

Having gone through the rather involved channel selection circuits of the remote control version of these Saba sets it remains only to note that the circuitry shown in Fig. 11 is very reliable in operation, possibly because it involves the use of simple low-current transistor circuits. To date we've never had a failure in this part of the set, despite the fact that we look after a couple of hundred of these receivers and have had failures in almost every other circuit. Doubtless someone somewhere has had the pleasure of a fault here, and has spent many hours puzzling over a circuit diagram trying to sort it all out.

TO BE CONTINUED

Servicing Saba Colour Receivers

Solid-state Chassis H

Part 4

P. C. Murchison

LAST month we saw how the ultrasonic remote control version of the receiver worked, and looked at the fault conditions to be found in that part of the set. In this part we are going to cover the i.f. and luminance circuits, ending next month with the colour circuits. Although most of these circuits are straightforward in operation, there are some interesting variations to be seen and quite a few servicing hints to be passed on.

So without further ado we'll quickly mention the i.f. strip and then plunge on into the mysteries of the luminance channel, with a view to making some sense of the unusual circuitry employed here. We've tried to make things a bit easier to understand by showing the various stages inside the i.c.s in block form, a policy we feel ought to be adopted as standard on all circuit diagrams.

After leaving the varicap tuner unit the i.f. signal passes into a four-stage transistor i.f. unit which is a solder-in printed circuit board mounted vertically on the main signal board on the left-hand side of the set. We've never experienced any faults on this unit, and feel that the best cure for any trouble is to replace the unit as a whole rather than trying to effect a repair. The vision detector is incorporated in the i.f. unit, and it's from here that the video signal passes via an emitter-follower to the TBA500P luminance signal processing i.c.

The Luminance channel

The emitter-follower transistor acts as an impedance matching device driving pin 2 of the i.c. (see Fig. 12). Once inside the i.c. the video signal is subjected to several stages of current amplification before emerging at pin 4 to feed the luminance delay line L351. The signal then passes to pin 8 of the i.c., minus the chroma information which is extracted by the 4·43MHz trap between R386 and R348. This trap is interesting since it operates only when a colour transmission is being received. Thus the full video bandwidth passes through on a monochrome transmission when there is no chrominance component to filter out. L356 and C357 form a series resonant (4·43MHz) tuned circuit to short out the chroma part of the bandwidth, whilst at the same time C356 forms a parallel resonant circuit with L356 to emphasize the frequencies above 4·43MHz, so improving the h.f. video response.

This series-parallel tuned circuit is switched into circuit when there is a colour transmission by transistor T352. This is in turn controlled by the colour-killer voltage which is derived from the chroma section of the set. When a colour transmission is being received, 8·5V from the colour killer is applied to R396 which in turn feeds the base of T352, turning it hard on so that its collector potential drops to zero volts. The collector of T352 is connected to the cathode of D353 via R393, and as T352's collector voltage drops to almost 0V the diode conducts connecting the lower end of the tuned circuit to chassis via the 12V rail decoupling capacitor C354. In this way the tuned circuit is switched into action.

Should the signal being received revert to monochrome however, the killer supplies no voltage to T352's base, the transistor cuts off and its collector voltage rises to 12V. The 12V is in turn applied via R393 to the cathode of D353 and since there's no potential difference between its anode and cathode the diode cuts off. Under these conditions the resonant circuit has no effect and the full luminance channel bandwidth passes through to pin 8 of the i.c.

The line and field flyback blanking pulses are also fed into pin 8 of the i.c. The luminance signal is thus blanked and then subjected to further amplification before emerging at pin 10 for feeding to the matrix i.c. Contrast and brightness control and beam limiting are also carried out within the TBA500.

Inside the TBA500, an "electronic potentiometer" circuit consisting of twelve transistors exercises linear control of the gain of the luminance channel. This is where contrast control is effected, the control itself being linked via D349 to pin 5. The voltage tapped from the control is used to increase or decrease the gain of the luminance channel.

This is not the whole story however, as the beam limiting action is also controlled at pin 5, excessive c.r.t. beam current causing a reduction in contrast.

The operation of the beam limiter circuit is based on the widely used principle of two currents flowing in opposite directions through a fully conductive diode. The diode concerned is D351, whose cathode is connected to the 12V supply while its anode is connected via R362 and R696 to the 270V h.t. rail. It's normally forward biased therefore, a bleed current flowing via the 12V supply, the diode and the two resistors to h.t. The c.r.t.'s cathode current flows through the diode in the opposite direction – via the tripler, the e.h.t. overwinding, R362, D351 and the impedance of the 12V supply. So long as the c.r.t.'s cathode current is below the 2mA bleed current, D351 remains conductive. Should the c.r.t.'s cathode current exceed 2mA however D351 ceases to conduct and the current then flows to chassis via R361, P354, P352, R366 and R364. In consequence the voltage at the slider of the contrast control moves negatively, reducing the gain in the TBA500P and hence the beam current. The colour saturation is also reduced since, as we shall see later, the contrast and saturation control circuits are linked. In this way the c.r.t. and the power supply are protected against overload. The time-constant of R361 and C347 (5·6msec) is such that short-term peak currents do not initiate the beam limiting action. D350 is incorporated to provide protection against the effects of c.r.t. flashovers – preventing damage to the two tantalum electrolytics C346 and C347.

This circuitry, also the colour-killer switch system, can be responsible for some interesting faults. Before going on to faults in this part of the circuit however we must consider the service switch and the a.g.c. system, both being associated with this i.c.

Pin 6 of the i.c. is connected via R351 to the service switch which, as shown, is usually connected to chassis. For setting up however there's a "raster" position of the switch, when R351 is connected to 12·8V instead. This interrupts the luminance signal path. The "raster" position of the switch is used for checking colour purity – turn down the

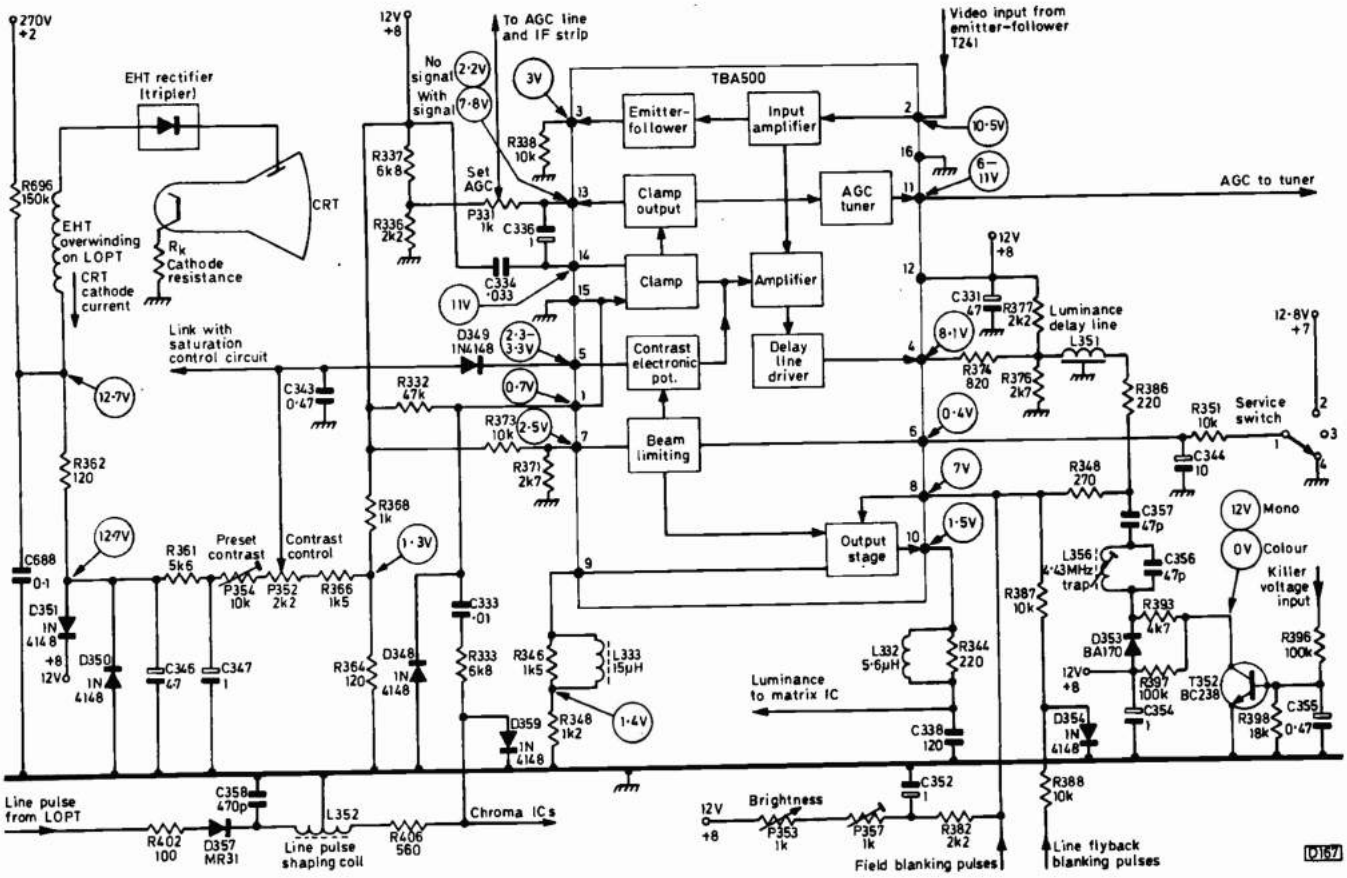

Fig. 12: Luminance signal processing is carried out by a TBA500 i.c., which also provides the a.g.c. potentials.

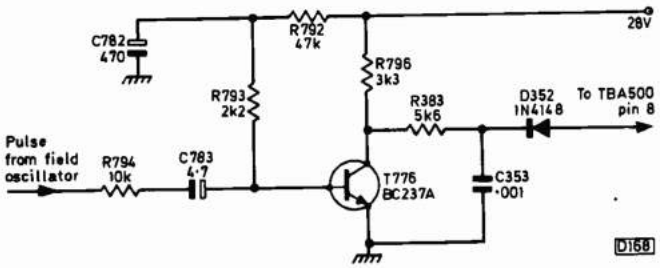

Fig. 13: The field flyback blanking pulse circuit.

blue and green c.r.t. first anode controls and examine the red raster then present. It's worth noting that the TBA500N requires a negative voltage at pin 6 to block the luminance channel. The two types of i.c. are not interchangeable therefore.

The i.c. provides an a.g.c. output at pin 13 to control the gain of the i.f. strip and an a.g.c. output at pin 11 to control the tuner. The a.g.c. system is a gated one, sampling the video signal black level (the back porch). A gating pulse is required therefore and is fed in at pin 1. The way in which the pulse is obtained – delayed to coincide with the back porch of the sync pulse – is interesting. Diode D357 is normally conductive, damping the tuned circuit L352/C358. A negative-going line flyback pulse is applied to the anode of D357 however, cutting it off. When this happens, the oscillatory circuit is shocked into oscillation, producing a delayed, negative-going pulse which is fed via R406, R333 and C333 to pin 1 of the i.c. The following positive-going half cycle of oscillation is short-circuited to chassis by D359. Note that pnp transistors are used in the tuner, 11·5V at pin 11 corresponding with maximum gain (forward a.g.c.).

The obvious fault to look at first is failure of the TBA500P i.c. itself. This does occur, though only very rarely. The i.c. is d.c. coupled to the TBA530 matrix i.c., so when it fails the result is usually a very bright raster with flyback lines. The set then automatically switches itself off when the protection circuit operates, because the beam current will have exceeded the normal "safe" level. Luminance channel faults often cause this effect, with the protection circuit coming into operation to save the day.

Other components which can cause this effect are C354 (12V decoupling) which goes leaky and D352 (Fig. 13) in the field flyback blanking pulse circuit – it tends to exhibit a poor back-to-front ratio.

The luminance delay line L351 is an extremely delicate component which sometimes goes open-circuit with the resulting loss of video.

Another nasty fault occurs in the beam limiting circuit, where R696 goes open-circuit. The voltage at pin 5 of the i.c. is then reduced to less than a volt, turning the internal electronic potentiometer down. C346 has been known to go leaky, usually causing a very pale picture – R696 going open-circuit usually causes complete loss of luminance.

Another electrolytic capacitor that's inclined to leak is C331. This pulls the 12V rail down with the resultant loss of luminance.

Sometimes we get the complaint that the picture gradually gets darker as the receiver warms up. Close examination will reveal that field flyback lines are clearly visible on the picture, indicating that all is not well with the field flyback blanking circuit. T776 is the culprit here. It's situated on the timebase panel, in the centre at the top. The voltage at its collector should be 28·5–30V under normal working conditions, but drops drastically when the transistor fails.

the next pulse to Tr2's base. This bistable circuit is an example of a digital application of transistors.

Colour Killer

Colour television receivers incorporate a colour killer circuit to cut off the chrominance amplifier during reception of a monochrome signal to avoid spurious colour effects from video components within the chrominance passband (4·3 ± 1MHz). Fig. 9 shows an example of a bipolar transistor used as a switch to achieve this. Tr1 is a 7·8kHz sinewave amplifier: it operates in class A, but for simplicity the stabilising components, i.e. the potential divider connected to the base and the decoupled emitter resistor, are omitted. Tr2 is the colour killer and Tr3 a 7·8kHz squarewave generator which takes the place of the multivibrator featured in the previous circuit.

During monochrome reception there is no 7·8kHz output from Tr1, and Tr2 is turned on since its emitter is connected to the 25V rail whilst its base is biased by the network D1, R2, R3, R4 and R5. The collector-emitter path in Tr2 is therefore of very low resistance, causing Tr3 to be turned off. Tr3's collector potential is near the supply negative value, therefore, and this potential is fed via R6 to the base of one of the chrominance amplifiers, cutting it off.

During colour reception the 7·8kHz signal from Tr1 collector is rectified by D1, and C2 is charged to a steady voltage approximately equal to the amplitude of the 7·8kHz signal across L1,C1. The voltage across C2 biases Tr2 base positively and cuts this transistor off, allowing the base of Tr3 to receive the 7·8kHz output developed across L1,C1 via R1. Tr3 is thus punched into conduction by the negative half-cycles from Tr1 collector, and the smoothed voltage across C3 rises to approximately 14V – sufficient to allow the chrominance amplifier to operate normally.

MULLARD HYBRID AMPLIFIERS

A series of hybrid i.c. wideband amplifiers, announced by Mullard, cover the frequency range from 40MHz to 860MHz and provide a choice of gain and output voltages. They can be used as masthead booster amplifiers in aerial systems, as preamplifiers in MATV systems, and as instrumentation amplifiers.

Output	Type	Stages	Gain (dB)	V_o* (dBμV)
Low	OM320	2	15.5	92
	OM321	2	15.5	98
	OM335	3	27	98
Medium	OM322	2	15	103
	OM336	3	22	105
High	OM323	2	15	113
	OM337	3	26	112

* minimum values
measured at –60dB IMD (DIN 45004, 3-tone)

With the exception of the OM322 which was designed for stripline techniques, all the amplifiers are encapsulated in a resin-coated body with in-line pins on 2·54mm centres for ease of mounting. Input and output impedances are 75Ω, and the supply voltage is nominally 24V. The devices, which can be cascaded if desired, have good linearity without trimming, a wide operating temperature range, small dimensions, and are easily handled and mounted.

Servicing Saba Colour Receivers

Solid-state Chassis H: Decoder

Part 5

P. C. Murchison

THERE are four i.c.s concerned with the colour signal, a TBA510 which provides chrominance and burst signal amplification and separation, a TBA540 which contains the reference oscillator and its a.p.c. loop, a TBA520 which provides chrominance signal demodulation and PAL switching, and a TBA530 which matrixes the luminance and the demodulated colour-difference signals to provide three primary-colour output signals. These are amplified by conventional single-transistor class A output stages which drive the c.r.t. cathodes.

Chroma Amplifier IC

Fig. 14 shows the TBA510 and its peripheral circuitry. The chroma signal from the i.f. strip arrives at pin 4. After amplification it appears at pins 8 and 9 for feeding to the chroma delay line circuit. During its journey through the i.c. it is subjected to various processes.

In Part 4 we saw how a delayed, negative-going pulse is generated for the a.g.c. circuit in the TBA500 luminance i.c. This same pulse is used for burst gating in the TBA510, being applied to pin 13. The resultant burst output appears at pin 12 and is fed via C447 to the TBA540 i.c. which incorporates the burst detector circuit.

The TBA540 incorporates a second detector which produces outputs used for automatic chrominance control, ident and operation of the colour-killer circuit. The a.c.c. output from the TBA540 is proportional to the amplitude of the burst signal, and is fed back to pin 2 of the TBA510 where it's used to control the chrominance signal amplitude. The signal path is via R452, with R456, R457 and C453 forming a damping network to suppress the effect of sudden changes in chrominance signal level.

Noise Suppression

With a monochrome signal being received, the a.c.c. circuit will increase the gain of the chrominance amplifier to maximum. Under these conditions several volts of noise appear at the burst output pin 12. Diodes D441/D442 and the associated capacitors C443/C444 are used to suppress this noise signal. On colour reception the two diodes are cut off by the voltage produced by the potential divider network R446/R445 (approximately 1·5V). The burst signal at pin 12 is around 1·5 peak-to-peak in amplitude so the diodes remain cut off, the burst peaks not being large enough to turn them on.

On monochrome however the several volts noise signal forward biases the two diodes and as a result C443 is charged negatively. This voltage is applied to pin 3 via R442 and R456, shutting down the chroma amplifier.

Colour Killer and Saturation Control

There's also a conventional colour-killer circuit, the control voltage (1·4V on monochrome, 2·6V on colour) from the TBA540 i.c. being applied to pin 5 of the TBA510. To override the colour killer when fault finding, link terminals G2 and G3.

Saturation control is effected by varying the voltage at pin 15. It's worth noting that the contrast control is interconnected with the colour control circuit. The slider of the contrast control is connected to the base of T351, thus controlling the conduction of this transistor. The colour control is connected in series with T351's emitter, its emitter voltage adjusting the colour so that the contrast and colour track together. This arrangement isolates the contrast and colour controls so that the beam limiter has minimal effect on colour.

No Colour

This part of the set has proved to be reliable, the i.c. very seldom failing. To check the circuit, override the colour killer and see if there's any colour present on the screen. If the picture remains in monochrome, check the i.c. and the 12V supply to pin 1. Lack of colour is sometimes due to leakage in C457, as a result of which the 12V supply is reduced. The i.c. is unpluggable. Substitution is quick and easy therefore, enabling this part of the circuit to be eliminated from suspicion with minimum effort.

Another cause of loss of colour is when the burst signal coupling capacitor C447 goes open-circuit. In this case however overriding the colour killer results in unlocked colour (horizontal colour bars) on the screen.

Reference Oscillator IC

The TBA540 reference oscillator i.c. is mounted on a separate, unpluggable board on the left of the signal board. The circuitry associated with the TBA540 and the rest of the decoder is shown in Fig. 15.

As previously mentioned, the TBA540 and TBA510 are interconnected. The TBA540 also provides at pin 4 the reference signal for the synchronous demodulators in the TBA520 chrominance demodulator i.c. The TBA540 has its own synchronous demodulators however, one for burst detection and a second which is fed (internally) with the detected bursts and with a half line frequency squarewave (from the TBA520 i.c.) which is fed in at pin 8. This second demodulator compares the squarewave and the burst component of the video signal in order to develop a.c.c., colour killer and ident signals. Only when the amplitude of the burst signal is large enough and the bistable in the TBA520 is operating in the correct phase will the control voltage at pin 9 be of the correct sense, decreasing with increase in the amplitude of the burst signal. If the phase of the bistable is incorrect, the voltage at pin 9 will rapidly rise. This voltage will be passed to pin 1 of the TBA520, where it will stop the bistable momentarily so that it's restored to the correct phase.

The voltage at pin 9 of the TBA540 is phase shifted and fed to pin 7 which provides the colour-killer voltage for the TBA510. The voltage here should be about 0·2V on monochrome and 8·5V on colour with correct ident phase.

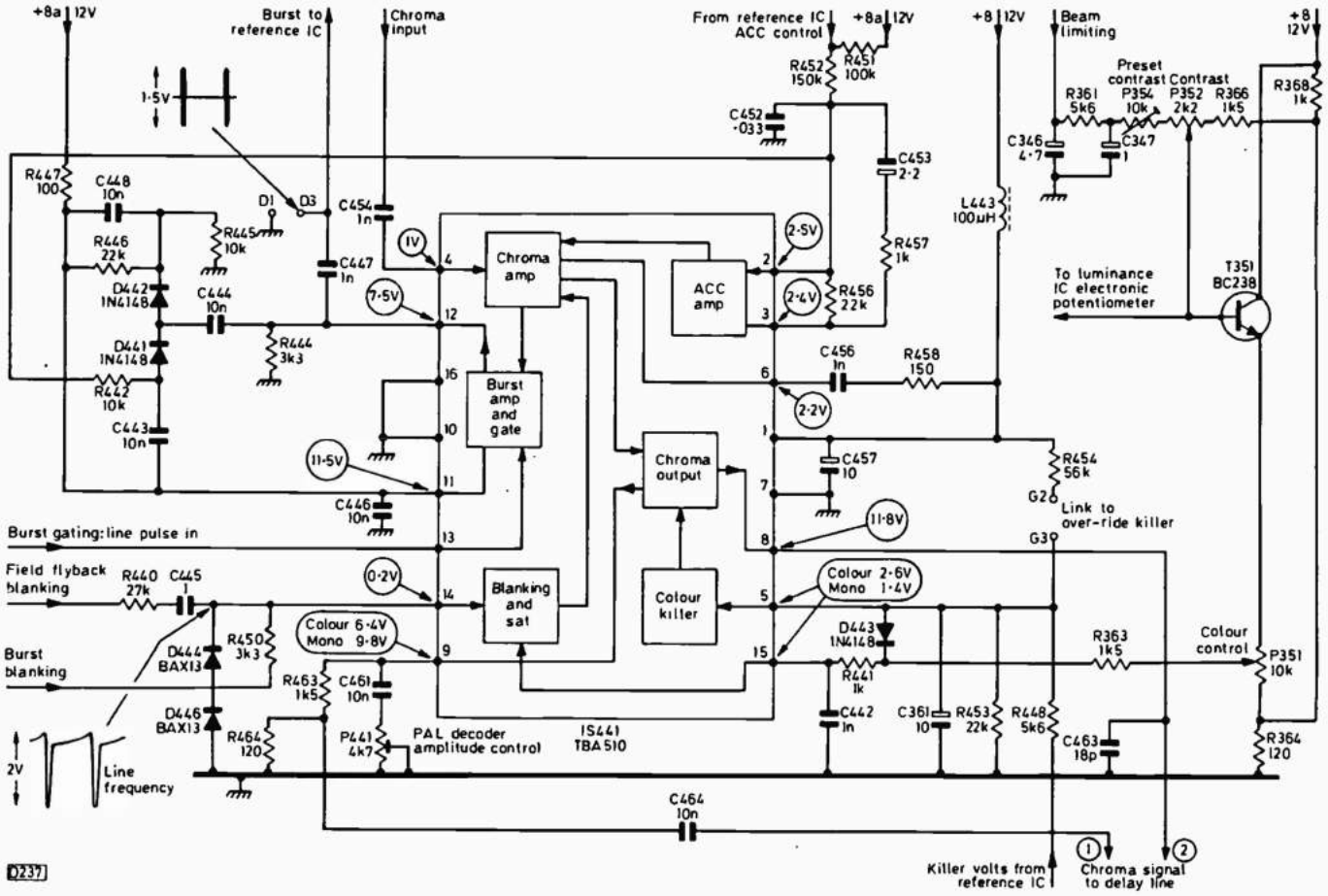

Fig. 14: The TBA510 chroma amplifier i.c. and its peripheral circuitry.

The reference signal at pin 4 is fed via R428/C363 and R439 to pin 2 of the TBA520. It's also phase shifted by R416 and C367 (90° shift, with C367 being adjustable) and then fed via R427 etc. to pin 8 of the TBA520.

The internal oscillator is controlled by the external 4·43MHz crystal Q371 which is connected between pins 1 and 15. The burst phase detector which compares the phase of the bursts and the reference oscillator's output drives an internal reactance stage whose output appears at pin 2. The a.p.c. loop's filtering components are connected between pins 13 and 14. The burst signal is coupled to pin 5 via C447, a minimum burst amplitude of 1·15V being required to operate the circuit.

The output at pin 2 is of very low impedance. The signals at pins 1 and 2 are in opposite phase, and the 60pF trimmer C370 is connected between these pins. The fact that the signals at each side of C370 are in opposite phase has a curious effect (in fact a Miller effect) on the effective value of C370 – its capacitance appears to increase by a factor dependent on the gain of the reactance stage driving pin 2. The gain of the reactance stage is controlled by the output from the burst detector, so the effective value of C370, which tunes the crystal, is determined by the phase relationship between the bursts and the reference oscillator. Such an arrangement is fairly critical in operation, and faults often seem to occur around this part of the receiver.

Loss of Colour

The usual fault symptom is complete loss of colour since the colour-killer voltage is absent at pin 7 of the i.c. The first thing to do is make sure that the set's tuned to a colour transmission or connected to a colour-bar generator. Then override the colour-killer (link pins G2 and G3). If there's no colour of any sort on the screen, it's quite possible that the oscillator has stopped. The best check is to try to look at the reference signal with a scope. At pin 4 or pin 6 of the subpanel there should be 1·2V p-p and 0·8V p-p respectively of reference signal. If there's complete lack of signal, suspect the i.c. itself or the 0·33µF capacitor C378 in the a.p.c. filter circuit – in extreme cases it will shut the oscillator down. Since the i.c. is soldered in, it's best to try the capacitor first.

A more likely effect on overriding the colour-killer is unlocked colour – coloured bands seem to move continually over the screen. Once again C378 is number one suspect, followed by C376 (0·33µF), C371 (0·47µF) and the trimmer C370. The 0·33µF capacitors have proved to be rather unreliable, being commonly responsible for intermittent loss of colour or colour fluctuation – because the reference oscillator intermittently goes out of lock and the a.c.c. voltage tends to vary (C376 is the a.c.c. filter capacitor).

Should the oscillator still be unlocked after changing the 0·33µF capacitors (C378/C376/C382), C370 may require resetting. To do this, override the colour killer and remove the burst by shorting together test points D1 and D3 (see Fig. 14). Then adjust C370 for stationary colour bars on the screen. Remove the short-circuit and if all is well the colour should lock in normally.

Hanover Blinds

The operation of the bistable in the TBA520 can be

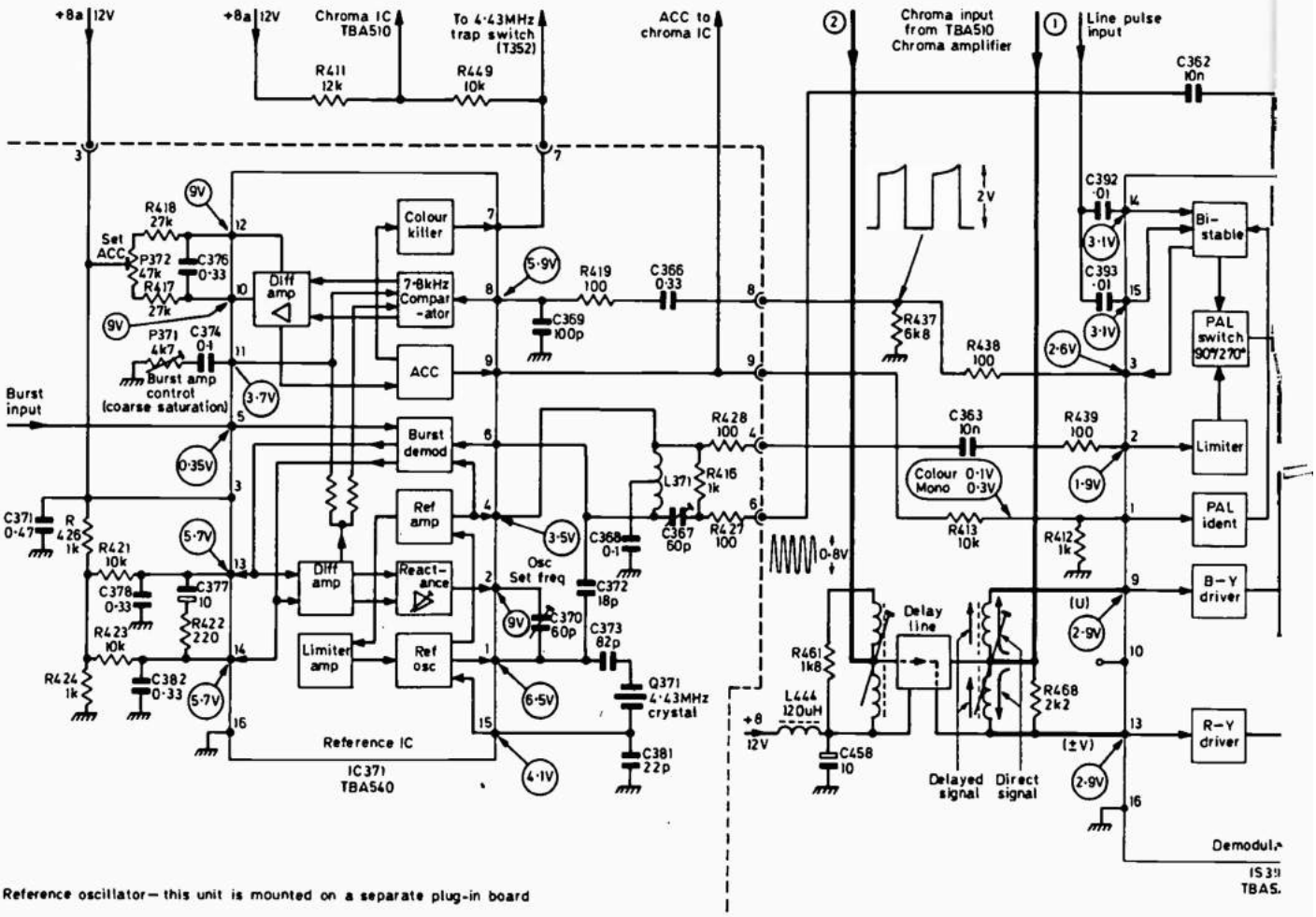

Fig. 15: The reference oscillator, demodulator and lumi

disrupted should C366, another 0·33μF capacitor, go open-circuit so that no half line frequency squarewave reaches pin 8 of the TBA540. As a result, no ident signal goes back to the TBA520 and the bistable no longer operates, producing the Hanover blind effect on the picture. This is a fairly common fault: any 0·33μF capacitor coloured green is suspect and should be replaced with something more reliable.

Matrixing and Demodulation

The two antiphase chroma signals from the TBA510 arrive at points 1 and 2 in Fig. 15 and then pass to the delay line/matrix circuit. One signal passes through the delay line while the other goes to the centre tap of the output coil where the delayed and direct signals are added and subtracted to give separate U and ±V outputs for pins 9 and 13 respectively of the demodulator/PAL switch i.c. TBA520. The demodulated B − Y and R − Y outputs appear at pins 7 and 4, while an internal matrix produces the G − Y signal at pin 5. The quadrature reference signals for the synchronous demodulators are fed in at pins 2 and 8, the V reference signal passing to the demodulator via the integrated PAL switch which inverts it on alternate lines.

PAL Switch

The internal bistable which drives the actual PAL switch is triggered by line pulses fed in at pins 14 and 15. As we've seen, this stage is interconnected with the TBA540 for ident purposes: the idea is that should the bistable phase be incorrect it's momentarily stopped by the signal applied to pin 1. Any voltage greater than 0·1V will stop the bistable operating.

Luminance/chrominance Matrixing

The demodulated colour-difference signals appearing at pins 4, 5 and 7 are fed to pins 4, 3 and 2 of the TBA530 luminance/colour-difference signal matrixing i.c. via filters which remove any remaining r.f. components. The luminance signal is fed into the TBA530 at pin 5, and the R, G and B outputs appear at pins 10, 13 and 16 respectively. The RGB signals are d.c. coupled to the output transistors and then d.c. coupled to the c.r.t. cathodes.

Operation of the Drive Controls

The three drive controls P481, P482 and P483 are used to set the signal levels/white tones at the c.r.t. cathodes. These controls apply negative feedback to the TBA530, and it's interesting to see how they operate so as not to alter the picture black level. We'll take the blue drive control P481 as an example.

The track of P481 is connected between the junctions of two potential dividers, R478/R481 on one side and R484/R486 on the other. This bridge arrangement means that from the d.c. point of view there is 6V at either side of P481 and thus no voltage across it. There will be signal variations on the left-hand side however, as this potential

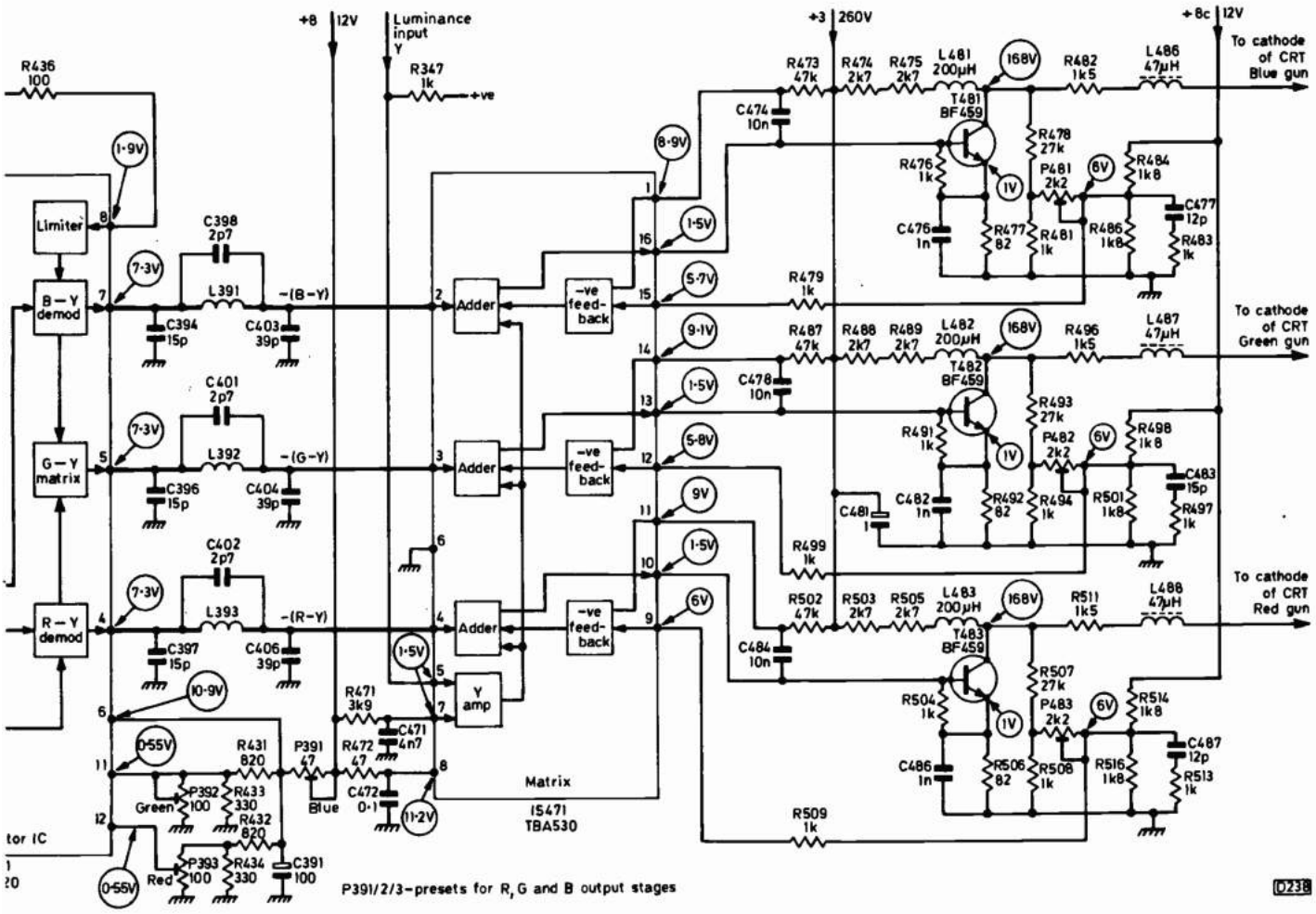

ance/chrominance matrixing i.c.s and RGB output stages.

divider is connected between the collector of the output transistor and chassis. So signal variations will be developed across P481, and a proportion is tapped off from the control and fed back to pin 15 of the TBA530 i.c., controlling the gain of the B channel. The other channels are controlled in the same way.

Hanover Blind Effects

The TBA520 section of the decoder is reliable, the only fault we've had on occasions being failure of C392 or C393 which couple the line pulses to the bistable. Sometimes the result is complete failure of the bistable to operate, with the symptom Hanover blinds on a colour picture. More often however the capacitors fail intermittently, the effect being normal colour over most of the screen with sections of the picture occasionally flashing over to Hanover blinds. A check with an oscilloscope will reveal whether the 6V pulses are present and correct at pins 14 and 15 or whether they are intermittent or missing.

All Red, Green or Blue Raster

One of the main problems with the decoder is that the TBA520, the TBA530, the output transistors and the c.r.t. are all d.c. coupled. Thus a fault way back in the TBA520 for example can upset the operation of all the following circuitry, often resulting in a brilliant red, green or blue raster. This is because the output stage affected is driven hard on, with the appropriate c.r.t. cathode voltage dropping to almost the grid voltage. The net result is that the automatic overload protection circuit shuts the set off completely.

Should this state of affairs be encountered – a brilliant raster of one colour, the set then switching itself off – the first suspect is the TBA530, the second suspect the TBA520 and the third suspect – the c.r.t. itself! We've had a lot of c.r.t.s with intermittent grid-cathode shorts on one of the guns. The usual complaint is that the screen suddenly goes brilliant red, green or blue, followed by the cutout switching the set off: if the set is then switched on again all may be well for half an hour or so after which there's a repeat performance. It's only a certain make of c.r.t. that does this. Unfortunately the only cure is an expensive tube change which doesn't go down too well with the customer.

RGB Output Stages

Before condemning the tube however it's as well to make sure that the output transistor in the offending channel is not short-circuit, and that the load resistors R474/5, R488/9 and R503/5 are in order. These have been known to go open-circuit with similar results.

Conclusion

This completes our survey of fault experiences with these sets. They were distributed throughout the UK, so you may well come across them. We hope these articles have provided useful clues. ■